CITY OF WHITEWATER
COMMON COUNCIL AGENDA

Common Council Meeting
Tuesday, August 6th, 2013
6:30 p.m.
City of Whitewater Municipal Building Community Room
312 W. Whitewater Street Whitewater, Wisconsin

CALL TO ORDER, ROLL CALL, AND PLEDGE OF ALLEGIANCE.

CONSENT AGENDA

CA-A	Approval of Council Minutes of 7/16/2013.
CA-B	Approval of payment of City invoices, processed thru 7/31/13.
CA-C	Acknowledgment of Receipt and Filing of the Following: *Police Department Monthly Report for June, 2013; *Irvin L. Young Memorial Library Board Minutes of 6/17/13.
CA-D	Expedited Approval of the Following Items, per City staff recommendation: O-1, O-2

STAFF REPORTS:

City Mgr.	Report on FEMA flood plain boundary adjustment maps.

HEARING OF CITIZEN COMMENTS. No formal Common Council Action will be taken during this meeting although issues raised may become a part of a future agenda. Participants are allotted a 3-5 minute speaking period. Specific items listed on the agenda may not be discussed at this time; however citizens are invited to speak to those specific issues at the time the Council discusses that particular item.

PUBLIC HEARINGS

1) Public Hearing Relating to Adoption of Jefferson County Hazards Mitigation Plan.

RESOLUTIONS:

R-1	Adopting Jefferson County Hazards Mitigation Plan. (City Manager Request).

ORDINANCES – First Reading - NONE

ORDINANCES – Second Reading

*O-1	Amending Library Board term expiration dates to make consistent with other Boards. (Library Director Request).
*O-2	Amending licensing fees for dogs. (Finance Director Request).

CONSIDERATIONS:

C-1	Authorization to add a generator to the N. Fraternity Lane lift station, and approval of expenditure for same. (Wastewater Treatment Supt. Request).

C-2	Approval of contract for completion of smoke testing in sanitary sewer. (Wastewater Treatment Supt. Request).
C-3	Request for authorization to purchase playground equipment for Turtle Mound Park. (Park Director Request).
C-4	Request for Direction on Field of Dreams project, in-kind donations, and award of contract (possibly amended) to E and N Hughes Co. Inc. for Treyton Field of Dreams. (Park Director Request).
C-5	Discussion regarding Stop Sign at the intersection of Elizabeth and Walworth Streets, and request for direction regarding the same. (Street Superintendent Request).
C-6	Request for approval of closure of First Street, from Main to Center, for Chamber of Commerce "Whitewater Wipeout" Event. (City Clerk Request).
C-7	Presentation by City Attorney McDonell regarding Open Meetings and Open Records Laws. (City Manager Request).
C-8	Councilmember request for future agenda items.
C-9	ADJOURNMENT

Anyone requiring special arrangements is asked to call the Office of the City Manager / City Clerk at least 72 hours prior to the meeting.

- **Items denoted with asterisks will be approved on the Consent Agenda unless any council member requests that it be removed for individual discussion.**

ABSTRACT/SYNOPSIS OF THE ESSENTIAL ELEMENTS OF THE OFFICIAL ACTIONS OF THE COMMON COUNCIL OF THE CITY OF WHITEWATER, WALWORTH AND JEFFERSON COUNTIES, WISCONSIN.

July 16, 2013

The regular meeting of the Common Council was called to order at 6:30 p.m. by Council President Singer. MEMBERS PRESENT: Abbott, Binnie, Bregant, Kidd, Singer. MEMBERS ABSENT: Winship (Winship was present for the beginning of the meeting via telephone).

ALDERMANIC DISTRICT 1 COUNCILMEMBER. Applications for the vacant councilmember seat were received from five applicants. Applications were received from Craig Stauffer, Phil Frawley, Tiiu Gray-Fow, Ryan Tevis, and James Allen. Allen's application was filed after the due date. Allen was on vacation and was not back in time to apply. It was moved by Abbott and seconded by Bregant to exclude any late-arriving councilmember applications. AYES: Abbott, Binnie, Singer, Bregant, Kidd (with regrets). NOES: Winship. After short presentations from remaining applicants, a vote was taken to appoint the following candidates: FRAWLEY: Abbott, Gray-Fow, Singer. GRAY-FOW: Binnie, Bregant, Kidd. The vote resulted in a tie. It was determined that a runoff would be held between Frawley and Gray-Fow, who both made additional statements. Council President Singer indicated that retiring Councilmember Olsen was supportive of Frawley being appointed to fill the vacant spot. A second vote was taken and the candidates received the following votes: FRAWLEY: Abbott, Winship, Binnie, Singer, Bregant, Kidd. Phil Frawley was appointed to serve as representative for Councilmember for Aldermanic District 1.

OATH OF OFFICE FOR PHIL FRAWLEY. City Clerk Smith administered the Oath of Office to newly-appointed councilmember Phil Frawley.

MINUTE APPROVAL AND ACKNOWLEDGMENT OF RECEIPT AND FILING OF REPORTS AND MINUTES. It was moved by Frawley and seconded by Binnie to approve the Council minutes of 6/18/2013 and to acknowledge receipt and filing of the following: Irvin L. Young Memorial Library Board Minutes of 5/20/2013; Report of Manually-Issued Checks for June, 2013; Financial Reports for June, 2013; Police Department Consolidated Monthly Report for May, 2013; Parks and Recreation Board Minutes of 5/14/2013; and the Plan and Architectural Review Commission Minutes of 6/10/2013.

PAYMENT OF INVOICES. It was moved by Frawley and seconded by Binnie to approve payment of city invoices in the total sum of $126,539.12. AYES: Abbott, Binnie, Bregant, Kidd, Singer, Frawley. NOES: None. ABSENT: Winship (telephone connection has now been broken).

STAFF REPORTS: A Proclamation recognizing Children's Vision Month was presented. He indicated that the DNR representatives who visited were impressed with the preemptive steps that the City has already taken.

CITIZEN COMMENTS: Streets Superintendent Chuck Nass gave an update on the status of the emerald ash borer, indicating that it has now been seen in Whitewater.

RESOLUTION AUTHORIZING STUDY OF WISCONSIN STREET INTERSECTION (RAILROAD TRACKS).

COMMON COUNCIL OF THE CITY OF WHITEWATER

PETITION TO DETERMINE THE ADEQUACY OF WARNING DEVICES

WHEREAS, Wisconsin Street, a public street in the City of Whitewater crosses the tracks of the Wisconsin & Southern Railroad at-grade, and

WHEREAS, the existing conditions at the rail-highway crossing may pose a threat to public safety as the crossing may have outdated signals and does not have gates.

WHEREAS, Wis. Stat. § 195.28 authorizes the Office of the Commissioner of Railroads to determine whether the existing warning devices are adequate to protect and promote public safety at any rail-highway crossing in the State of Wisconsin,

NOW, THEREFORE, BE IT RESOLVED, that the Common Council of the City of Whitewater hereby directs city staff to take all necessary steps to petition the Office of the Commissioner of Railroads (OCR) for an investigation and order determining the adequacy of warning devices at the rail-highway crossing of Wisconsin Street crossing by the Wisconsin & Southern Railroad in the City of Whitewater, Walworth County, Wisconsin. **FURTHER, BE IT RESOLVED,** that city staff pursue funding for any ordered improvements through OCR's Safety Project Program or the Wisconsin Department of Transportation's Highway Safety Improvement Program (HSIP).

Resolution introduced by Councilmember Binnie who moved its adoption. Seconded by Councilmember Abbott. AYES: Abbott, Binnie, Bregant, Kidd, Singer, Frawley. NOES: None. ABSENT: Winship. ADOPTED: July 16, 2013.

Cameron L. Clapper, City Manager Michele R. Smith, City Clerk

FIRST READING OF ORDINANCE AMENDING LIBRARY BOARD TERM EXPIRATION DATES TO COINCIDE WITH EXPIRATION DATES OF OTHER CITY BOARDS AND COMMISSIONS.

ORDINANCE AMENDING CHAPTER 2.56
LIBRARY BOARD

The Common Council of the City of Whitewater, Walworth and Jefferson Counties, Wisconsin, do hereby ordain as follows:

Section 1: Whitewater Municipal Code, Chapter 2.56, subsection 2.56.010 is hereby amended to read as follows:

2.56.010 - Membership

The library board shall consist of seven members who shall be appointed pursuant to the terms of Whitewater Municipal Ordinance Chapter 2.12 and whose appointments shall be confirmed by the Common Council. Members shall be residents of the municipality, except that not more than two members may be residents of towns adjacent to the municipality. Upon their first appointment, the members shall be divided as follows: Three members shall serve for three years, two members shall serve for two years, and one to serve from one year from ~~July~~ May first in the year of their appointment. Each regular appointment shall be for a term of three years. The appointing authority shall appoint as one of the members a school district administrator, or his or her representative, to represent the public school district or districts in which the public library is located. Not more than one member of the municipal governing body shall be a member of the library board.

Ordinance introduced by Councilmember Frawley**,** who moved its adoption. Seconded by Councilmember Binnie.

AYES: Abbott, Binnie, Bregant, Kidd, Singer, Frawley. NOES: None. ABSENT: Winship.
FIRST READING APPROVED: July 16, 2013.

Cameron L. Clapper, City Manager Michele R. Smith, City Clerk

FIRST READING OF ORDINANCE AMENDING DOG LICENSING FEES.

ORDINANCE AMENDING CHAPTER 9.08 CONCERNING FEES FOR DOG LICENSES

The Common Council of the City of Whitewater, Walworth and Jefferson Counties, Wisconsin, do hereby ordain as follows:
Section 1. Whitewater Municipal Code Chapter 9.08, Section 9.08.020(d) is hereby amended to read as follows:
(d) Fees.
(1) A license shall be issued after payment of the applicable fee:
(A) For each unneutered male dog, Twenty dollars;
(B) For each neutered male dog, Fifteen dollars;
(C) For each unspayed female dog, Twenty dollars;
(D) For each spayed female dog, Fifteen dollars.

Section 2. This ordinance shall take effect upon passage and publication as required by law.

Ordinance introduced by Councilmember Frawley, who moved its adoption. Seconded by Councilmember Binnie.

AYES: Abbott, Binnie, Bregant, Kidd, Singer, Frawley. NOES: None. ABSENT: Winship. FIRST READING APPROVED: July 16, 2013.

Cameron L. Clapper, City Manager Michele R. Smith, City Clerk

SECOND READING OF ORDINANCE PROHIBITING PARKING ON PORTIONS OF E. MAIN STREET.

Ordinance No. 1857A– Final

ORDINANCE AMENDING CHAPTER 11.16.150 OF THE CITY OF WHITEWATER MUNICIPAL CODE ENTITLED "STREET INDEX OF PARKING RESTRICTIONS.

The Common Council of the City of Whitewater, Walworth and Jefferson Counties, Wisconsin, does hereby ordain as follows:

SECTION 1: Chapter 11.16.150 entitled "Street Index of Parking Restrictions" shall be amended as follows:

The following is hereby ***deleted*** from the Street Index of Parking Restrictions:

Main – E	South side; from a point 184 feet east of the east curb line of N Cherry, east to a point 132 feet east	11.16.080	No Parking

The following is hereby ***added*** to the chart entitled Street Index of Parking Restrictions:

Main – E	Both sides, from the east curb line of N. Cherry to the west curb line of N. Wakely.	11.16.080	No Parking
Main – E	Both sides – from east curb line of N. Harris to the west curb line of N. and S. Newcomb.	11.16.080	No Parking
Main - E	South side, from east curb line of N. Fonda to the west curb line of N. Harris.	11.16.080	No Parking
Main – E	Both sides; from the east curb line of N. Wakely to the west curb line of N. Fonda.	11.16.080	No Parking

SECTION 2: This ordinance shall take effect upon passage and publication as provided by law.

Ordinance introduced by Councilmember Binnie, who moved its adoption. Seconded by Councilmember Frawley. AYES: Abbott, Binnie, Bregant, Kidd, Singer, Frawley. NOES: None. ABSENT: Winship. ADOPTED: July 16, 2013.

Cameron L. Clapper, City Manager Michele R. Smith, City Clerk

APPROVAL OF CLASS B BEER LICENSE AND CLASS C WINE LICENSE FOR TACO FRESCO. It was moved by Abbott and seconded by Binnie to approve a "Class B" Beer License and a "Class C" Wine License for Jesus Cortez, Taco Fresco restaurant at 175 W. Main Street, Whitewater. AYES: Abbott, Binnie, Bregant, Kidd, Singer, Frawley. NOES: None. ABSENT: Winship.

E. MAIN STREET ROAD CLOSURE (CONSISTENT WITH ROADWAY CHANGES THAT WILL OCCUR WITH EAST GATEWAY PROJECT). City Manager Clapper recommended that portions of E. Main Street be closed / diverted so that residents could get some sort of a feel for the changes that will be coming when the East Gateway project is in place. A lengthy discussion ensued, and it was decided that since the proposed rerouting would not give residents a true picture of the project, no preliminary changes would be made.

GREATER WHITEWATER COMMITTEE (DISCOVER WHITEWATER SERIES) REQUEST FOR STREET CLOSURE. The Greater Whitewater Committee is planning a ½ marathon and 5K event on September 22, and has requested closure and/or partial closure of numerous streets in the City. It was moved by Binnie and seconded by Frawley to approve the Street closures as submitted by the Greater Whitewater Committee with clarification that the Janesville Street closure will be from Walworth Street to the north.. AYES: Binnie, Bregant, Kidd, Singer, Frawley. NOES: None. ABSENT: Winship. ABSTAIN: Abbott.

ACTION ON PRELIMINARY DESIGN FOR EAST GATEWAY PROJECT. Neighborhood Services Director Birkeland presented preliminary plans for the East Gateway project, located at the intersection of E. Main Street and Wisconsin / E. Milwaukee Streets. The project includes in part, reconfiguration of Main St. / Whitewater St. traffic signals; elimination of parking stalls on the north side of Main near the bridge; construction of a raised median along the curve from Main to Wisconsin (prohibits eastbound traffic on E. Main, east of Wisconsin); "Squaring up" of intersections of E. Main / Wisconsin; and sidewalk/ bike path construction. Property owner Donna Henry stated the effect this project would have on her three properties which are located within the East Gateway project area. She expressed concern about the negative effects of traffic flow and how it would make it difficult for delivery people as well as customers. It was noted that removal of parking on Main Street by the bridge would be a huge detriment to the business building she owns in that area. It was recommended that the City consider adding some parking on the city-owned property just west of the Baker Building (owned by Donna Henry). It was moved by Binnie and seconded by Bregant to approve the preliminary design of the East Gateway project, with the direction given to pursue improvement of the parking lot east of the Brass Rail. AYES: Frawley, Abbott, Binnie, Singer, Bregant, Kidd. NOES: None. ABSENT: Winship.

HIGHWAY 59 / MILWAUKEE STREET DESIGN ELEMENTS. The Wisconsin Department of Transportation ("WisDOT") plans to reconstruct the Highway 59 – Milwaukee Street intersection in 2017. The area included in the project begins 200 feet east of Newcomb Street and continues east to the roundabout. A public information meeting regarding this project was held on May 15. A terrace width of 5.5' on the south side of the street (including curb) is recommended by City staff. For the north side of the street commencing at the point 200' east of Newcomb to Willard Street, a terrace width of 4' is proposed. A pedestrian island at Taft Street and redesign of the Old Bluff Road intersection are also proposed. It was moved by Binnie and seconded by Abbott to approve the Highway 59 / Milwaukee Street design elements. AYES: Frawley, Abbott, Binnie, Singer, Bregant, Kidd. NOES: None. ABSENT: Winship.

KILAR FIELD OF DREAMS BID AND PROJECT. Parks and Recreation Director Amundson reported that one bid (E & N Hughes) was received for the Field of Dreams project. Amundson indicated that there is a water service line buried in the area where the Field of Dreams will be constructed, and it is strongly recommended that the main be relocated. Amundson also indicated that after reviewing bids and having contacts with local contractors, it is his belief that by utilitizing local contractors in a coordinated effort with E & N Hughes and Strand Associates, a modified quantity bid could be obtained and construction can move forward using the donated services. It was noted that permission from E & N Hughes would have to be obtained first. Amundson also indicated that the Community Foundation is willing to let the Field of Dreams group secure letters of commitment for donated services. It was noted that the City's Capital Improvement Plan ("CIP") allows for $225,000 towards the parking lot and shared use path improvements. The City's portion of the project is currently estimated at $307,482. Amundson and City Manager Clapper mentioned the possibility of borrowing or changing the scope of the project. Amundson stressed that engineering fees are an expense *over and above* those cited.

In response to Amundson's request for direction from the Council, it was agreed that the relocation of the water line was crucial. It was moved by Binnie and seconded by Abbott to authorize Amundson to pursue formal Letters of Intent from those willing to donate their services. AYES: Frawley, Abbott, Binnie, Singer, Bregant, Kidd. NOES: None. ABSENT: Winship. Amundson was directed to bring detailed information about potential changes to scope of services and information regarding funding sources prior to a final decision being made. Amundson indicated that the information would be provided at the August 6th council meeting.

POLICY RELATING TO USE OF CITY RIGHT-OF-WAY FOR NON-CITY PURPOSES. City Manager Clapper asked the Council to consider the establishment of an interim policy on the installation of fiber and/or conduit by private firms within the public right of way. The primary areas where requests have been made involve access to right of way adjacent to a public street, across or under a public street, and within public conduit. Ultimately the Council will need to adopt an ordinance addressing these issues. Clapper indicated that given the requests already received, he believed it would be appropriate to address the issues through an interim policy until the more comprehensive ordinance can be completed and brought to Council.

A lengthy discussion ensued, where application fees, procedural matters and forms of fee determination were discussed. In addition to application fees, Council discussed annual or recurring fees. Councilmember Kidd noted that the agreement does not address use by successor owners. Councilmember Abbott indicated that a specific agreement is scheduled for later on the agenda, and it would be unfair to change that particular agreement after the fact. Abbott expressed concern about adopting a policy hastily.

It was moved by Binnie and seconded by Bregant to approve the proposed Interim policy with the understanding that a $150 non-refundable application fee will be charged; an annual usage fee of $250 will be charged (amount of annual fee will continue to be reviewed); the Privileges on Streets Committee will be eliminated; appeals will be made to the Common Council; and language authorizing the benefits to transfer to heirs, successors and assigns will be added. AYES: Frawley, Binnie, Singer, Bregant, Kidd. NOES: Abbott. ABSENT: Winship.

AGREEMENT WITH DLK ENTERPRISES, INC., RELATING TO INSTALLATION OF FIBER OPTIC CABLE ON CITY-OWNED PROPERTY. It was moved by Binnie and seconded by Kidd to approve an agreement with DLK Enterprises, Inc. to allow for installation of

fiber optic cable on city-owned property across Whiton and Cottage Streets (near their intersections with Main Street). AYES: Frawley, Binnie, Singer, Bregant, Kidd. NOES: None. ABSTAIN: Abbott. ABSENT: Winship.

WARHAWK COUNTRY LLC MEMORANDUM OF REDEVELOPMENT AGREEMENT AND AMENDMENT OF AGREEMENT. It was moved by Binnie and seconded by Abbott to approve an amendment to the Development Agreement with Warhawk Country LLC. It was noted that the Warhawk Country properties are selling, and the new owner will be taking responsibility for the development agreement. AYES: Frawley, Abbott, Binnie, Singer, Bregant, Kidd. NOES: None. ABSENT: Winship.

SALE OF BUSINESS PARK PROPERTY TO COMMUNITY DEVELOPMENT AUTHORITY. A lengthy discussion ensued relating to the benefits of transferring ownership of city-owned property to the Community Development Authority, to allow that body to handle property sales. CDA Director Cannon indicated that City ownership delays development when authorization to sell land has to be obtained from both the CDA and the City Council. It was clarified that sales of public property must also go before the Plan Commission. CDA Director Cannon was not aware of that requirement. City Manager Clapper indicated that the proposed agreement was not a final document, and that much legal review must still be completed. Clapper indicated that he was looking for direction from the Council. Council indicated that they approved of the agreement in concept. Further information will be forthcoming after the CDA has reviewed and approved the agreement.

DENIAL OF BARBARA DEEGAN PERSONAL INJURY CLAIM. It was moved by Binnie and seconded by Abbott to deny the claim filed against the City by Barbara Deegan. The claim relates to a fall she experienced on W. Main Street. AYES: Abbott, Binnie, Bregant, Singer, Frawley. NOES: None. ABSENT: Winship. ABSTAIN: Kidd.

PURCHASE OF CHASSIS. It was moved by Frawley and seconded by Binnie to approve the purchase of a used chassis from Lakeside International of Janesville, Wisconsin at a cost of $87,975. AYES: Frawley, Abbott, Binnie, Bregant, Kidd, Singer. NOES: None. ABSENT: Winship.

APPOINTMENT OF COUNCILMEMBER REPRESENTATIVES TO BOARDS AND COMMISSIONS. It was moved by Abbott and seconded by Binnie to appoint Patrick Singer as council representative to the Alcohol Licensing Committee and to appoint Phil Frawley as the alternate member to the Plan Commission. AYES: Frawley, Abbott, Binnie, Singer, Bregant, Kidd. NOES: None. ABSENT: Winship.

COUNCILMEMBER REQUESTS FOR FUTURE AGENDA ITEMS: None.

EXECUTIVE SESSION. It was moved by Singer and seconded by Binnie to adjourn to Closed Session, NOT TO RECONVENE, pursuant to Wisconsin Statutes 19.85(1)(e) "Deliberating or negotiating the purchasing of public properties, the investing of public funds, or conducting other specified public business, whenever competitive or bargaining reasons require a closed session. Item to be discussed: Purchase of real estate on Ann Street. AYES: Frawley, Abbott, Binnie, Singer, Bregant, Kidd. NOES: None. ABSENT: Winship. Being no further business to come before the open portion of the meeting, the meeting adjourned at 10:10 p.m.

Respectfully submitted,

Michele R. Smith,
City Clerk

Report Criteria:
Detail report.
Invoices with totals above $0.00 included.
Paid and unpaid invoices included.

Vendor	Vendor Name	Invoice Number	Description	Invoice Date	Net Invoice Amount	GL Account Number
ABENDROTH WATER COND						
502	ABENDROTH WATER COND	502-080713	WASTEWATER/LAB SUPPLIES	08/07/2013	26.46	620-62870-340
502	ABENDROTH WATER COND	502-080713	WASTEWATER/OPERATING SU	08/07/2013	753.75	620-62840-340
	Total ABENDROTH WATER COND:				780.21	
ALL PEST CONTROL						
4613	ALL PEST CONTROL	2013-1624	COMMUNITY BLDG/ PEST CON	08/07/2013	114.00	100-51600-355
	Total ALL PEST CONTROL:				114.00	
AT&T LONG DISTANCE						
4746	AT&T LONG DISTANCE	080713-4746	GEN BLDG/LONG DISTANCE	08/07/2013	407.89	100-51450-225
4746	AT&T LONG DISTANCE	4746-080713	SAFETY BLDG/LONG DIST	08/07/2013	24.71	100-51450-225
4746	AT&T LONG DISTANCE	4746-080713	LIBRARY/LONG DISTANCE	08/07/2013	16.73	220-55110-225
4746	AT&T LONG DISTANCE	4746-080713	STREET/LONG DISTANCE	08/07/2013	24.80	100-53230-241
4746	AT&T LONG DISTANCE	4746-080713	WATER/LONG DISTANCE	08/07/2013	5.35	610-61921-310
4746	AT&T LONG DISTANCE	4746-080713	WASTEWATER/LONG DISTANC	08/07/2013	18.67	620-62820-225
	Total AT&T LONG DISTANCE:				498.15	
BALL, RICHARD						
1033	BALL, RICHARD	30566	INNOVATION CTR/MATS	08/07/2013	173.40	920-56500-250
1033	BALL, RICHARD	30599	STREET/SHOP SUPPLIES	08/07/2013	149.70	100-53230-340
	Total BALL, RICHARD:				323.10	
CITGO						
5404	CITGO	38637499	POLICE PATROL/GAS	08/07/2013	2,308.64	100-52110-351
5404	CITGO	38637499	POLICE INV/GAS	08/07/2013	201.77	100-52120-351
5404	CITGO	38637499	FIRE/GAS	08/07/2013	646.96	100-52200-351
5404	CITGO	38637499	RESCUE/GAS	08/07/2013	1,052.82	100-52300-351
5404	CITGO	38637499	CSO/GAS	08/07/2013	372.97	100-52140-351
	Total CITGO:				4,583.16	
COOPER, MARGARET A						
432	COOPER, MARGARET A	353692	POLICE ADMN/NOTARY STAMP	08/07/2013	86.80	100-52100-340
	Total COOPER, MARGARET A:				86.80	
DALE'S BOOTERY LLC						
4598	DALE'S BOOTERY LLC	BABCOCK	STREET/BOOTS	08/07/2013	245.00	100-53300-118
4598	DALE'S BOOTERY LLC	FREEMAN	STREET/BOOTS	08/07/2013	244.80	100-53300-118
	Total DALE'S BOOTERY LLC:				489.80	
DIVERSIFIED BENEFIT SVC INC						
4192	DIVERSIFIED BENEFIT SVC INC	167202	FINANCE/JULY FLEX SVC	08/07/2013	276.76	100-51500-217
	Total DIVERSIFIED BENEFIT SVC INC:				276.76	

Vendor	Vendor Name	Invoice Number	Description	Invoice Date	Net Invoice Amount	GL Account Number
FIRST CITIZENS STATE BANK						
222	FIRST CITIZENS STATE BANK	JUNE-DEC 201	FINANCE/ACH SVC	08/07/2013	330.00	100-51500-650
	Total FIRST CITIZENS STATE BANK:				330.00	
FLORAL VILLA						
302	FLORAL VILLA	016558	GEN ADMN/KRAEGE	08/07/2013	35.00	100-51400-310
	Total FLORAL VILLA:				35.00	
GRAINGER INC						
367	GRAINGER INC	9173946709	GEN BLDG/METAL LAMP	08/07/2013	76.96	100-51600-355
	Total GRAINGER INC:				76.96	
H & H FIRE PROTECTION LLC						
120	H & H FIRE PROTECTION LLC	9697	STREET/VEHCILE BRACKETS	08/07/2013	22.50	100-53230-340
	Total H & H FIRE PROTECTION LLC:				22.50	
HARRISON WILLIAMS MCDONNELL						
62	HARRISON WILLIAMS MCDONN	203352	CDA/LEGAL	08/07/2013	480.00	900-56500-212
62	HARRISON WILLIAMS MCDONN	203374	LEGAL/ELKHORN RD VENTURE	08/07/2013	10.00	100-51300-212
	Total HARRISON WILLIAMS MCDONNELL:				490.00	
JOHN DEERE FINANCIAL						
6276	JOHN DEERE FINANCIAL	61832	STREET/#70 TIRE REPAIRS	08/07/2013	35.00	100-53230-352
6276	JOHN DEERE FINANCIAL	61846	STREET/TIRE REPAIR	08/07/2013	50.00	100-53230-352
6276	JOHN DEERE FINANCIAL	61881	STREET/#70 TIRE REPAIRS	08/07/2013	690.00	100-53230-352
6276	JOHN DEERE FINANCIAL	61883	STREET/#48 FRONT END LOAD	08/07/2013	485.00	100-53230-352
6276	JOHN DEERE FINANCIAL	61887	STREET/#32 TIRE REPAIRS	08/07/2013	820.00	100-53230-352
6276	JOHN DEERE FINANCIAL	61922	STREET/TIRE REPAIRS	08/07/2013	36.00	100-53230-352
6276	JOHN DEERE FINANCIAL	61958	STREET/SQUAD #26 TIRES	08/07/2013	204.20	100-53230-354
6276	JOHN DEERE FINANCIAL	62030	STREET/POLICE VEHICLE #24	08/07/2013	35.00	100-53230-354
6276	JOHN DEERE FINANCIAL	62083	STREET/PAINTER TRUCK TIRE	08/07/2013	75.00	100-53230-352
6276	JOHN DEERE FINANCIAL	IC09784	PARKS/THROTTLE	08/07/2013	12.91	100-53270-242
6276	JOHN DEERE FINANCIAL	IC10123	PARKS/RECOIL ROPE	08/07/2013	3.24	100-53270-242
6276	JOHN DEERE FINANCIAL	IW24859	PARKS/TUBE	08/07/2013	4.50	100-53270-242
	Total JOHN DEERE FINANCIAL:				2,450.85	
JOHNS DISPOSAL SERVICE INC						
42	JOHNS DISPOSAL SERVICE IN	48606	CITY/BULK	08/07/2013	4,087.89	230-53600-219
42	JOHNS DISPOSAL SERVICE IN	48606	RECYCLE/EXTRA PICK UP	08/07/2013	175.00	230-53600-219
42	JOHNS DISPOSAL SERVICE IN	48606	CITY/RECYCLING	08/07/2013	6,401.79	230-53600-295
42	JOHNS DISPOSAL SERVICE IN	48606	CITY/REFUSE	08/07/2013	20,542.29	230-53600-219
	Total JOHNS DISPOSAL SERVICE INC:				31,206.97	
JOHNSON BLOCK & CO INC						
4258	JOHNSON BLOCK & CO INC	408416	FINANCE/WRS PAYROLL QUES	08/07/2013	495.00	100-51500-214
4258	JOHNSON BLOCK & CO INC	408416	WATER/WRS PAYROLL QUESTI	08/07/2013	180.00	610-61923-210
4258	JOHNSON BLOCK & CO INC	408416	WASTEWATER/WRS PAYROLL	08/07/2013	180.00	620-62810-219
4258	JOHNSON BLOCK & CO INC	408416	STORMWATER/WRS PAYROLL	08/07/2013	45.00	630-63300-214
	Total JOHNSON BLOCK & CO INC:				900.00	

Vendor	Vendor Name	Invoice Number	Description	Invoice Date	Net Invoice Amount	GL Account Number
KB SHARPENING SERVICES INC						
110	KB SHARPENING SERVICES IN	76557	PARKS/LAWN MOWER BLADES	08/07/2013	15.00	100-53270-242
110	KB SHARPENING SERVICES IN	76673	PARKS/LAWN MOWER BLADES	08/07/2013	32.00	100-53270-242
	Total KB SHARPENING SERVICES INC:				47.00	
LEAGUE OF MINNESOTA CITIES						
6840	LEAGUE OF MINNESOTA CITIE	183873	GEN ADMN/ASST TO CITY MGR	08/07/2013	150.00	100-51400-310
	Total LEAGUE OF MINNESOTA CITIES:				150.00	
LOWREY, BRADLEY D						
5708	LOWREY, BRADLEY D	1596	NEIGHBORHOOD SVC/MOWIN	08/07/2013	187.50	100-52400-219
5708	LOWREY, BRADLEY D	1597	NEIGHBORHOOD SVC/MOWIN	08/07/2013	587.75	100-52400-219
	Total LOWREY, BRADLEY D:				775.25	
MENARD INC						
494	MENARD INC	30392	STREET/SNOW FENCE	08/07/2013	726.90	100-53300-405
	Total MENARD INC:				726.90	
MENARDS - JOHNSON CREEK						
2534	MENARDS - JOHNSON CREEK	19624	WATER/BLDG IMPROVEMENTS	08/07/2013	223.29	610-61935-350
	Total MENARDS - JOHNSON CREEK:				223.29	
MIDSTATE EQUIPMENT-JANESVILLE						
1470	MIDSTATE EQUIPMENT-JANES	J26933	STREET/MOWER REPAIRS	08/07/2013	8,509.86	100-53230-352
	Total MIDSTATE EQUIPMENT-JANESVILLE:				8,509.86	
SAM'S CLUB						
1592	SAM'S CLUB	1592-080713	RESCUE/MEETING FOOD	08/07/2013	75.49	100-52300-340
1592	SAM'S CLUB	1592-080713	SENIORS/PROGRAM FOOD	08/07/2013	40.08	100-46733-55
1592	SAM'S CLUB	1592-080713	SENIORS/PAPER GOODS & OF	08/07/2013	31.51	100-55310-340
	Total SAM'S CLUB:				147.08	
STA-LITE CORP						
102	STA-LITE CORP	5253	PARKS/LAKE FOUNTAIN REPAI	08/07/2013	530.00	100-53270-295
	Total STA-LITE CORP:				530.00	
TRI COUNTY COOLING & HEATING LLC						
5283	TRI COUNTY COOLING & HEATI	1669	GEN BLDG/WHITE BLDG AIR C	08/07/2013	11,730.00	100-51600-244
5283	TRI COUNTY COOLING & HEATI	1671	GEN BLDG/ROOFTOP CONTRO	08/07/2013	2,570.00	100-51600-244
5283	TRI COUNTY COOLING & HEATI	1685	GEN BLDG/HISTORICAL SOC R	08/07/2013	421.00	100-51600-244
	Total TRI COUNTY COOLING & HEATING LLC:				14,721.00	
WALMART COMMUNITY						
1507	WALMART COMMUNITY	1507-080713	POLICE ADMN/OPERATING SU	08/07/2013	29.35	100-52100-340
1507	WALMART COMMUNITY	1507-080713	POLICE PATROL/OPERATING S	08/07/2013	33.99	100-52110-340
1507	WALMART COMMUNITY	1507-080713	POLICE PATROL/FIREARMS TR	08/07/2013	20.76	100-52110-360
1507	WALMART COMMUNITY	1507-080713	REC/KIDS ESCAPE PROGRAM	08/07/2013	135.50	100-55300-341
1507	WALMART COMMUNITY	1507-080713	LIBRARY/JUVENILE PROGRAM	08/07/2013	388.70	220-55110-342
1507	WALMART COMMUNITY	1507-080713	WATER/CLEANING SUPPLIES	08/07/2013	72.28	610-61935-350

Vendor	Vendor Name	Invoice Number	Description	Invoice Date	Net Invoice Amount	GL Account Number
1507	WALMART COMMUNITY	1507-080713	WASTEWATER/PC SPEAKERS	08/07/2013	24.88	620-62820-310
1507	WALMART COMMUNITY	1507-080713	WASTEWATER/OPERATING SU	08/07/2013	75.65	620-62840-340
	Total WALMART COMMUNITY:				781.11	
WALTON SAND PIT						
6987	WALTON SAND PIT	1193	STREET/SALT & SAND	08/07/2013	367.50	100-53320-460
	Total WALTON SAND PIT:				367.50	
WHITEWATER FIRE DEPT						
284	WHITEWATER FIRE DEPT	06-13 CREDIT	FIRE/KALAHARI	08/07/2013	821.76	100-52200-211
284	WHITEWATER FIRE DEPT	06-13 CREDIT	FIRE/WITMER PUBLIC SAFETY	08/07/2013	655.42	100-52200-241
284	WHITEWATER FIRE DEPT	M TAYLOR	FIRE/KWIK TRIP LINN FD TRNG	08/07/2013	8.51	100-52200-211
	Total WHITEWATER FIRE DEPT:				1,485.69	
WI DEPT OF JUSTICE						
69	WI DEPT OF JUSTICE	L6505T 07/01/	BEV OP/RECORD CHECK	08/07/2013	420.00	100-44122-51
69	WI DEPT OF JUSTICE	L6505T 07/01/	REC/RECORD CHECK	08/07/2013	70.00	100-55210-790
69	WI DEPT OF JUSTICE	L6505T 07/01/	STREET/RECORD CHECK	08/07/2013	35.00	100-53100-310
2105	WI DEPT OF JUSTICE	T15768	DISPATCH/QUARTERLY SVC	08/07/2013	2,262.00	100-52600-295
	Total WI DEPT OF JUSTICE:				2,787.00	
	Grand Totals:				73,915.94	

Dated: _____07/31/2013_____

Finance Director: _____DOUG SAUBERT_____

Report Criteria:
Detail report.
Invoices with totals above $0.00 included.
Paid and unpaid invoices included.

Whitewater Police Department Consolidated Monthly Report

June 2013

Lisa K. Otterbacher
Chief of Police

Whitewater Police Department
312 West Whitewater Street
Whitewater, Wisconsin 53190

Unified Crime Reporting Incidents
Year-to-Date Statistics

	No. of Incidents		Total Amount Lost	
	2013	**2012**	**2013**	**2012**
Murder/Non-Negligent Manslaughter	0	0	$0	$0
Sexual Assaults - 1st, 2nd, 3rd, 4th Degree	16	8	$0	$0
Total Robbery	1	0	$350	$0
Total Burglary	26	21	$12,253	$14,632
Total Motor Vehicle Thefts	2	0	$2,250	$0
Thefts				
Pocket Picking	0	0	$0	$0
Purse Snatching	0	0	$0	$0
Shoplifting	12	5	$4,379	$198
From Automoblies	8	18	$2,865	$4,344
Automoblie Parts/Accessories	6	15	$775	$2,974
Bicycles	8	6	$650	$888
From Buildings	22	36	$8,755	$12,875
Coin Operated Machine	1	0	$1,075	$0
All Other	23	29	$3,501	$9,039
Total Thefts	80	109	$22,000	$30,318
Grand Total	**125**	**138**	**$36,853**	**$44,950**

Property Amount Stolen and Recovered
Year to Date Statistics

	2013	**2012**
Property Stolen	$36,853	$44,950
Property Recovered	$18,618	$17,101
Percentage Recovered/Stolen	51%	38%
Property Stolen Average per Month	$6,142	$7,492

NOTE: In addition to the recovery of stolen property, there was $ 0.00 recovered as a result of restitution paid for investigative costs and non-sufficient funds checks cashed.
Year to date total $ 0.00

Comparison of Charges

Charge Totals:	Monthly	Year to Date
Adult	177	1,291
Juvenile	26	99
Combined Total	**203**	**1,390**

Charges	This Month	This Year to Date	Last Year to Date	Increase/ Decrease
Animal Cruelty	0	0	1	-1
Animal Ordinance Violations	1	6	8	-2
Arson	0	0	0	SAME
Assault (Aggravated)	0	8	4	4
Assault (Other)	0	14	19	-5
Bail Jumping	4	20	14	6
Bomb Threat	0	0	0	SAME
Burglary	14	16	6	10
Burglary Tools - Possess	0	0	1	-1
Cause <18 to Listen/View Sex Activity	2	2	0	2
Cigarette / Tobacco Violation	0	0	9	-9
Citations Written for Parking Tickets	0	0	0	SAME
Contribute to Delinquency	0	0	2	-2
Contribute to Truancy	0	5	1	4
Controlled Substance - Possession	6	33	42	-9
Controlled Substance - Sale / Manufacture	1	29	22	7
Court Order Violation	0	2	1	1
Criminal Damage	4	19	20	-1
Criminal Trespassing	1	6	1	5
Curfew	4	6	1	5
Disorderly Conduct	22	130	193	-63
Embezzlement	0	0	12	-12
Emergency Detention / Protective Custody	5	21	17	4
Escape	0	0	0	SAME
Facilitate Child Sex Crime by Computer Use	0	0	0	SAME
Fail to Obey Officer	1	3	12	-9
False Imprisonment	0	0	1	-1
Fireworks - Sell / Discharge without Permit	0	0	0	SAME
Forgery and Counterfeiting	0	0	4	-4
Fraud	0	9	22	-13
Illegal Blood Alcohol Content (IBAC)	5	53	46	7
Impersonate Peace Officer	0	0	0	SAME

Continued on next Page

Charges	This Month	This Year to Date	Last Year to Date	Increase/ Decrease
Intentionally Neglect Child	1	1	0	1
Kidnapping	0	0	0	SAME
Lewd and Lascivious Behavior	2	2	0	2
Liquor Laws	13	86	189	-103
Littering	1	2	0	2
Mental Harm of Child	3	3	0	3
Motor Vehicle Theft	2	4	0	4
Murder and Non-Negligent Manslaughter / Attemp	0	0	0	SAME
Negligent Handling of Burning Materials	0	0	0	SAME
Noise	1	9	12	-3
Obstruct / Resist Officer	1	16	16	SAME
Obstructions on Streets Prohibited	0	0	0	SAME
Offenses Against Family and Children	0	0	3	-3
Open Burning Permit Violation	0	1	0	1
Operate Auto While Intoxicated	7	64	50	14
Park Regulations	0	2	0	2
Pornography / Obscenity	0	3	0	3
Possess Drug Paraphernalia	2	20	34	-14
Prostitution (Enticement)	0	2	2	SAME
Reckless Endangering Safety	0	0	0	SAME
Registered Sex Offender Violations	0	0	0	SAME
Robbery	0	0	1	-1
Runaway	2	5	5	SAME
Sex Offenses (Other)	0	4	0	4
Sexual Assault - 1st Degree	3	5	1	4
Sexual Assault - 2nd Degree	0	5	0	5
Sexual Assault - 3rd Degree	0	1	0	1
Sexual Assault - 4th Degree	0	1	0	1
Solicitors / Peddlers Prohibited	0	0	0	SAME
Stolen Property	0	0	4	-4
Theft (Except Motor Vehicle)	16	68	43	25
Traffic Offenses	65	596	461	135
Traffic Ordinance Violations	0	1	0	1
Truancy	1	16	11	5
Warrant Served - Local	6	48	80	-32
Warrant / Pickups for Other Agencies	7	42	54	-12
Weapons (Conceal / Possess / Negligent Use)	0	1	5	-4
Zoning Violations	0	0	3	-3
Total	**203**	**1,390**	**1,433**	**-43**

Miscellaneous Activities and/or Complaints

Type of Activity/Complaint	This Month	This Year to Date	Last Year to Date
Calls for Service	595	3,365	3,565
Activity Logs *	6	42	87
Traffic Stops *	139	1,209	1,114
Family Disturbances	1	16	17
Noise Complaints	24	184	178
Animal Complaints	31	134	130
False Alarms	7	49	35

* Officer initiated activities

Motor Vehicle Accidents

Type of Activity/Complaint	This Month	This Year to Date	Last Year to Date
Fatal	0	0	0
Personal Injury	3	15	9
Pedestrian/Bicycle	0	1	2
Hit and Run	1	36	18
Property Damage over $1000	7	69	46
Property Damage under $1000	4	27	34
Total	**15**	**148**	**109**

Parking Tickets Issued

Type of Activity/Complaint	This Month	This Year to Date	Last Year to Date
Issued by Patrol Officers	100	946	1,176
Issued by Community Service Officers	131	567	881
Total	**231**	**1,513**	**2,057**

Monies Received

Type	This Month	This Year to Date	Last Year to Date
Bicycle Licenses	$3.00	$27.00	$21.00
Citations/Warrant Payments	$1,334.60	$11,364.52	$23,468.38
License Plate Renewal Service Fee *	$108.00	$155.25	-
Miscellaneous	$58.90	$107.80	$80.46
Parking Honor Box	$96.00	$1,948.59	$186.86
Parking Permits	$2,240.00	$14,205.00	$11,715.00
Parking Violations	$6,020.00	$40,522.02	$53,530.00
Total	**$9,860.50**	**$68,330.18**	**$89,001.70**

* These funds are used for crime prevention initiatives.

Overtime Hours

Type	This Month	This Year to Date	Last Year to Date
Adminstrative Duties	1.500	10.250	29.250
Bike Patrol	0.000	5.000	34.250
County Court	13.250	104.250	110.250
Municipal Court	0.000	21.000	35.250
Data Entry	0.250	9.750	38.250
Foot Patrol	0.000	3.500	0.000
Investigation	22.500	270.500	306.500
Meeting	2.000	86.000	95.000
Officer In Charge	18.000	122.750	68.000
Other *	0.750	28.500	45.750
Parking	0.000	0.000	10.000
Prisoners (Transport/Custody)	11.500	49.250	26.000
Radio Dispatch	2.000	19.250	63.500
Reports	11.250	56.750	83.500
Roll Call	25.250	164.250	133.000
Special Event	0.000	12.750	55.750
Squad Patrol	19.250	261.000	307.000
Traffic	0.000	7.750	1.000
Training	106.500	388.750	484.250
Holidays	0.000	400.500	378.250
Total	**234.000**	**2,021.750**	**2,304.750**

* Other consisted of overtime for clerical assigned duties.

WPD Personnel Training

- From June 3rd through June 7th, Det. Meyer attended Basic Evidence Technician training held in Pewaukee.
- From June 10th through June 13th, Officers Weston and Hintz attended IPMBA Bike School held at UW Whitewater.
- From June 11th through June 13th, Officer Schleis attended Breath Examiner training held in Janesville.
- From June 17th through June 21st, Officer Becker attended Basic Evidence Technician training held in Pewaukee.
- On June 17th, 24th and 26th, all sworn personnel attended Firearms Training at the Walworth County Range.
- On June 17th, WPD retirees, Mike Strauss, Larry Meyer, Dave Haberman, Roger Millard and Jim Nevicosi, participated in the HR218 Retiree Shoot at the Walworth County Range.

Presentations and Appearances by WPD Personnel

- On June 3rd, Juvenile Officer Valadez gave a presentation on Summer Safety to Lincoln Charter School (LINCS) students.
- On June 6th, Juvenile Officer Valadez gave a presentation on Summer Safety to Washington Elementary School students.
- On June 6th, Juvenile Officer Valadez gave a presentation on Active Shooter and Safety to Whitewater High School students.

Proactive Community Policing and Crime Prevention Initiatives

- On June 1st the Whitewater Police Department conducted a 5K/10K Run/Walk fundraiser for the creation of the Whitewater Police K9 Unit.
- On June 6th, Chief Lisa Otterbacher, Captain Brian Uhl, Support Services Manager Kathy Boyd, Det. Sgt. Tina Winger, Sgt. Dan Bradford, Sgt. Dave Gempler, Juvenile Officer Saul Valadez, Ofc. Neal Kolb, Ofc. Jacob Hintz, Ofc. Derrick Schleis, and Dispatcher Heidi Gempler participated in the Law Enforcement Torch Run for Special Olympics.
- On June 6th, Chief Lisa Otterbacher and Parks and Recreation Program Coordinator Michelle Dujardin participated in the Whitewater High School Career and Academic Senior Portfolio Presentations.

Irvin L. Young Memorial Library
431 W Center St
Whitewater WI 53190
Board of Trustees Regular Meeting
White Memorial Room
Monday, June 17, 2013, 6:30 pm

Present: Julie Caldwell, Richard Helmick, Rose Mary Leaver, Donna Nosek, Vicki Santacroce **Absent:** Sharon Knight, Jim Winship
Administrative Staff Present: Stacey Lunsford, Diane Jaroch, Cathy Bloom
Also Present: Danielle Hudson

1. President Nosek called the meeting to order at 6:34 p.m.
2. The consent agenda was approved as presented. MSC (Leaver/Helmick) Ayes: Caldwell, Helmick, Leaver, Nosek, Santacroce Noes: None
3. The circulation, service, and Mango statistics reports for May 2013 were acknowledged and accepted as presented. MSC (Santacroce/Caldwell) Ayes: Caldwell, Helmick, Leaver, Nosek, Santacroce Noes: None
4. The treasurer's report for May 2013 was acknowledged and accepted as presented. MSC (Helmick/Leaver) Ayes: Caldwell, Helmick, Leaver, Nosek, Santacroce Noes: None
5. Citizen input regarding matters not on agenda; no action at this meeting: Danielle Hudson stated concern for better posting/advertising of library programs.
6. OLD BUSINESS
   a) Library Building Expansion Project ~ nothing new to report.
   b) Council and Community Communications ~ nothing new to report.
   c) System Planning ~ Stacey and Cathy Bloom met with Josh Clements and Steve Grabow again. The next step is to have a public forum in late July or August. They are currently working on scheduling the event. Stacey shared a proceedings report with the Board.
7. NEW BUSINESS
   a) The motion was made to accept housing a "Little Free Library" on the grounds of the library to be located on Center Street, donated by the Friends of the Library. MSC (Helmick/Leaver) Ayes: Caldwell, Helmick, Leaver, Nosek, Santacroce Noes: None
   b) The motion was made to accept the revised Staff Loan Privileges policy as presented. MSC (Helmick/Leaver) Ayes: Caldwell, Helmick, Leaver, Nosek, Santacroce Noes: None
   c) The motion was made to have Stacey proceed with the pursuit of getting a security system installed at the library. MSC (Helmick/Leaver) Ayes: Caldwell, Helmick, Leaver, Nosek, Santacroce Noes: None
8. DIRECTOR'S REPORT
   SUGGESTION BOX: None
   DIRECTOR'S REPORT—As Submitted by Stacey Lunsford
   a) Discover Whitewater would like to plant a memorial tree in Fred Kraege's honor. I have corresponded with Kristine Zaballos about this and we agreed that they would wait until we have an approved conceptual plan so that the tree could be planted somewhere where it would not be disturbed by future construction.

Anyone requiring special arrangements is asked to call the office of the Library Director (473-0530) 72 hours prior to the meeting.

b) I will be serving on the joint committee of Lakeshores and Mid-Wisconsin board members, directors, and system staff who will be discussing the possibility of a system merger now that Lakeshores is without a director. Our first meeting will be June 19, 4:00 pm, in Horicon.
c) Diane and I visited Lomira's library on May 30 and discussed makerspaces with their director, Shannon Barniskis. We determined that the first equipment we would want to purchase would be a VHS-to-DVD converter, a slide/negative/photograph converter, and a vinyl LP-to-digital converter. We are still researching different brands, models, and features. I will bring this up on the agenda as soon as we are ready to discuss specifics.

9. ADULT SERVICES REPORT—As submitted by Diane Jaroch
   a) I attended WAPL May 2-3 and gathered many good ideas. The most useful session I attended was on Makerspaces and was presented by Shannon Barniskis, the Director of the Quadgraphics Lomira Community library.
   b) Our first annual Book It! 5k and Family Fun Run on May 4 was a great success.
   c) I proctored one online exam during the month of May.
   d) On Thursday, May 30, Stacey and I visited the Lomira Quadgraphics Community Library to tour their Makerspace. It was very helpful in helping us determine what type of equipment and services we would like to make available in our Makerspace.
   e) The small lobby display case for May promoted "Choose Privacy Week" which was May 1-7. The large display case promoted travel and displayed a variety of materials available at the library for patrons to check-out when making travel plans.
   f) Crime Club met on May 29 and the book discussed was Devious by Lisa Jackson. The discussion was led by Tina Pontel.
   g) During the month of May I worked on finalizing all of the programs and activities for our 3rd annual Adult Summer Reading Program.

10. YOUTH SERVICES REPORT—As submitted by Cathy Bloom
   a) The Book It committee and I met for a wrap up meeting on May 16th. We did thank you cards for the sponsors and made plans for next year's event which will be held on May 3, 2014.
   b) Lego was held on May 21st and there were 26 children in attendance. Lego Club will resume in September.
   c) Also in May, I gave a school tour to the Kindergarten and 1st graders from LINCS.
   d) On May 28th, the young adult librarian from West Bend came to our library to help with the Battle of the Books tournament. Battle of the Books questions for the local tournaments as well as for the system tournament were sent to the participating libraries.
   e) Also in May, Sherry, Lindsey and I continued to work on this year's summer reading program.

Anyone requiring special arrangements is asked to call the office of the Library Director (473-0530) 72 hours prior to the meeting.

f) I am on the committee for Family Fun Night at Horicon Marsh which is scheduled for July 9 from 5:00-10:00 p.m.

11. Board member reports: Rose Mary Leaver went to Elkhorn for a "Friends of Library" information sharing event. Richard Helmick wanted to note our sincere appreciation to Donna Nosek and Rose Mary Leaver for their service and leadership on the Board over the past few years.
12. Board member requests for future agenda items: NONE
13. Confirmation of next meeting on July 15, 2013, 6:30 p.m.
14. The meeting was adjourned at 7:42 p.m. MSC (Leaver/Helmick) Ayes: Helmick, Leaver, Nosek, Santacroce Noes: None

* Items denoted with asterisks will be approved on the Consent Agenda unless any board member requests that it be removed for individual discussion.

Minutes submitted by Vicki Santacroce, Board of Trustees Secretary

Vicki Santacroce

Anyone requiring special arrangements is asked to call the office of the Library Director (473-0530) 72 hours prior to the meeting.

Federal Emergency Management Agency

Washington, D.C. 20472

July 3, 2013

CERTIFIED MAIL
RETURN RECEIPT REQUESTED

IN REPLY REFER TO:
APPEAL START

July 3, 2013

Cameron Clapper
City Manager, City of Whitewater
Post Office Box 178
Whitewater, Wisconsin 53190

Case No: 13-05-0778S
Community: City of Whitewater,
Walworth County, Wisconsin
Community No.: 550200

Dear Mr. Clapper:

On March 4, 2013, the Department of Homeland Security's Federal Emergency Management Agency (FEMA) provided your community with Preliminary copies of the revised Flood Insurance Rate Map (FIRM) and Flood Insurance Study (FIS) report for Walworth County and Incorporated Areas, Wisconsin. FEMA has posted digital copies of these revised FIRM and FIS report materials to the following Website: http://www.starr-team.com/starr/RegionalWorkspaces/RegionV/WalworthWIPMR. The Preliminary FIRM and FIS report include proposed flood hazard information for certain locations in the City of Whitewater, Walworth County, Wisconsin. The proposed flood hazard information may include addition or modification of Special Flood Hazard Areas, the areas that would be inundated by the base (1-percent-annual-chance) flood; base flood elevations or depths; zone designations; or regulatory floodways.

We have published a notice of the proposed flood hazard determinations in the *Federal Register* and will publish a public notification concerning the appeal process (explained below) in the *Elkhorn Independent* on or about July 11, 2013, and July 18, 2013. We will also publish a separate notice of the flood hazard determinations on the "Flood Hazard Determinations on the Web" portion of the FEMA Website (www.fema.gov/plan/prevent/fhm/bfe). We have enclosed copies of the notice published in the *Federal Register* and the newspaper notice for your information.

These proposed flood hazard determinations, if finalized, will become the basis for the floodplain management measures that your community must adopt or show evidence of having in effect to qualify or remain qualified for participation in the National Flood Insurance Program (NFIP). However, before any new or modified flood hazard information is effective for floodplain management purposes, FEMA will provide community officials and citizens an opportunity to appeal the proposed flood hazard information presented on the preliminary revised FIRM and FIS report posted to the above-referenced Website.

Section 110 of the Flood Disaster Protection Act of 1973 (Public Law 93-234) is intended to ensure an equitable balancing of all interests involved in the setting of flood hazard determinations. The legislation provides for an explicit process of notification and appeals for your community and for private persons prior to this office making the flood hazard determinations final. The appeal procedure is outlined below

for your information and in the enclosed document titled *Criteria for Appeals of Flood Insurance Rate Maps*.

During the 90-day appeal period following the second publication of the public notification in the above-named newspaper, any owner or lessee of real property in your community who believes his or her property rights will be adversely affected by the proposed flood hazard determinations may appeal to you, or to an agency that you publicly designate. It is important to note, however, that the sole basis for such appeals is the possession of knowledge or information indicating that the proposed flood hazard determinations are scientifically or technically incorrect. The appeal data must be submitted to FEMA during the 90-day appeal period. Only appeals of the proposed flood hazard determinations supported by scientific or technical data can be considered before FEMA makes its final flood hazard determination at the end of the 90-day appeal period. Note that the 90-day appeal period is statutory and cannot be extended. However, FEMA also will consider comments and inquiries regarding data other than the proposed flood hazard determinations (e.g., incorrect street names, typographical errors, omissions) that are submitted during the appeal period, and will incorporate any appropriate changes to the revised FIRM and FIS report before they become effective.

If your community cannot submit scientific or technical data before the end of the 90-day appeal period, you may nevertheless submit data at any time. If warranted, FEMA will revise the FIRM and FIS report after the effective date. This means that the revised FIRM would be issued with the flood hazard information presently indicated, and flood insurance purchase requirements would be enforced accordingly, until such time as a revision could be made.

Any interested party who wishes to appeal should present the data that tend to negate or contradict our findings to you, or to an agency that you publicly delegate, in such form as you may specify. We ask that you review and consolidate any appeal data you may receive and issue a written opinion stating whether the evidence provided is sufficient to justify an official appeal by your community in its own name or on behalf of the interested parties. Whether or not your community decides to appeal, you must send copies of individual appeals and supporting data, if any, to:

G. Fritz Statz, WT/3
Wisconsin Department of Natural Resources
P.O. Box 7921, 101 South Webster St, Madison WI, 53707-7921
608-266-2709
gordon.statz@wisconsin.gov

If we do not receive an appeal or other formal comment from your community in its own name within 90 days of the second date of public notification, we will consolidate and review on their own merits such appeal data and comments from individuals that you may forward to us, and we will make such modifications to the proposed flood hazard information presented on the revised FIRM and in the revised FIS report as may be appropriate. If your community decides to appeal in its own name, all individuals' appeal data must be consolidated into one appeal by you, because, in this event, we are required to deal only with the local government as representative of all local interests. We will send our final decision in writing to you, and we will send copies to the community floodplain administrator, each individual appellant, and the State NFIP Coordinator.

All appeal submittals will be resolved by consultation with officials of the local government involved, by an administrative hearing, or by submission of the conflicting data to an independent scientific body or appropriate Federal agency for advice. Use of a Scientific Resolution Panel (SRP) is also available to your community in support of the appeal resolution process when conflicting scientific or technical data are submitted during the appeal period. SRPs are independent panels of experts in hydrology, hydraulics, and other pertinent sciences established to review conflicting scientific and technical data and provide recommendations for resolution. An SRP is an option after FEMA and community officials have been engaged in a collaborative consultation process for at least 60 days without a mutually acceptable resolution of an appeal. Please refer to the enclosed "Scientific Resolution Panels" fact sheet for additional information on this resource available to your community.

FEMA will make the reports and other information used in making the final determination available for public inspection. Until the conflict of data is resolved and the [revised] FIRM becomes effective, flood insurance available within your community will continue to be available [under the effective NFIP map], and no person shall be denied the right to purchase the applicable level of insurance at chargeable rates.

The decision by your community to appeal, or a copy of its decision not to appeal, should be filed with this office no later than 90 days following the second publication of the flood hazard determination notice in the above-named newspaper. Your community may find it appropriate to call further attention to the proposed flood hazard determinations and to the appeal procedure by using a press release or other public notice.

If warranted by substantive changes, during the appeal period we will send you Revised Preliminary copies of the revised FIRM and FIS report. At the end of the 90-day appeal period and following the resolution of any appeals and comments, we will send you a Letter of Final Determination, which will finalize the flood hazard information presented on the revised FIRM and FIS report and will establish an effective date.

If you have any questions regarding the proposed flood hazard determinations, revised FIRM panels, or revised FIS report for your community, please call our FEMA Information eXchange (FMIX), toll free, at 1-877-FEMA-MAP (1-877-336-2627) or e-mail the FMIX staff at FEMAMapSpecialist@riskmapcds.com.

Sincerely,

Luis Rodriguez, P.E., Chief
Engineering Management Branch
Federal Insurance and Mitigation Administration

List of Enclosures:

Newspaper Notice
Proposed Flood Hazard Determinations FEDERAL REGISTER Notice
Criteria for Appeals of Flood Insurance Rate Maps
"Scientific Resolution Panels" Fact Sheet

cc: Community Map Repository
Latisha Birkeland, Community Floodplain Administrator/Neighborhood Services Manager, City of Whitewater

DEPARTMENT OF HOMELAND SECURITY

FEDERAL EMERGENCY MANAGEMENT AGENCY

Proposed Flood Hazard Determinations for Walworth County, Wisconsin, and Incorporated Areas

The Department of Homeland Security's Federal Emergency Management Agency has issued a preliminary Flood Insurance Rate Map (FIRM), and where applicable, Flood Insurance Study (FIS) report, reflecting proposed flood hazard determinations within Walworth County, Wisconsin, and Incorporated Areas. These flood hazard determinations may include the addition or modification of Base Flood Elevations, base flood depths, Special Flood Hazard Area boundaries or zone designations, or the regulatory floodway. Technical information or comments are solicited on the proposed flood hazard determinations shown on the preliminary FIRM and/or FIS report for Walworth County, Wisconsin, and Incorporated Areas. These flood hazard determinations are the basis for the floodplain management measures that your community is required to either adopt or show evidence of being already in effect in order to qualify or remain qualified for participation in the National Flood Insurance Program. However, before these determinations are effective for floodplain management purposes, you will be provided an opportunity to appeal the proposed information. For information on the statutory 90-day period provided for appeals, as well as a complete listing of the communities affected and the locations where copies of the FIRM are available for review, please visit FEMA's website at www.fema.gov/plan/prevent/fhm/bfe, or call the FEMA Map Information eXchange (FMIX) toll free at 1-877-FEMA MAP (1-877-336-2627).

For a regulatory appeal, if the community is not satisfied with the recommendation of the Panel or the determination of the FEMA Administrator, it may appeal to the appropriate United States District Court.

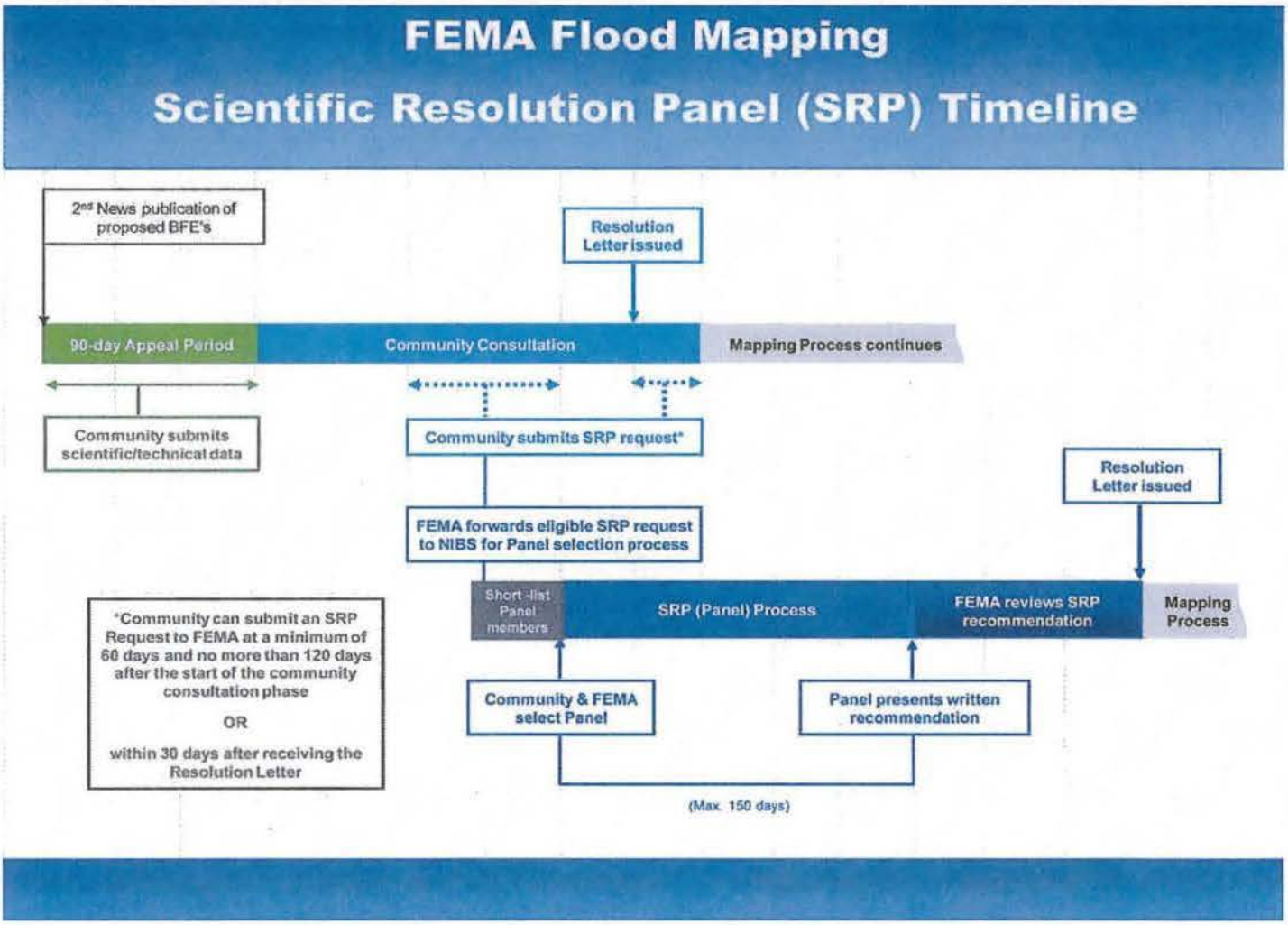

For Additional Information

For more information on appeals, see the FEMA document: *Appeals, Revisions, and Amendments to National Flood Insurance Program Maps: A Guide for Community Officials*.

Part 67 of the NFIP regulations, which pertains to appeals, is available on the "Forms and Publications" section of FEMA's Flood Hazard Mapping website at www.fema.gov/fhm.

Other Important Links: www.floodSRP.org www.fema.gov/plan/prevent/fhm/st_hot.shtm#2

Risk MAP: www.fema.gov/plan/prevent/fhm/rm_main.shtm

Flood Hazard Mapping: www.floodmaps.fema.gov Flood Insurance: www.floodsmart.gov

R-1

Resolution ___
[City/Village] of ____

A RESOLUTION ADOPTING THE JEFFERSON COUNTY NATURAL HAZARDS MITIGATION PLAN: 2013-2017

WHEREAS, the United States Congress passed the Disaster Mitigation Act of 2000 (DMA2K), which requires that a local unit of government must have an approved all hazard mitigation plan before it can receive Federal grant monies from the Federal Emergency Management Agency for pre-disaster mitigation projects; and

WHEREAS, the [City/Village] worked with Jefferson County Emergency Management to update the countywide mitigation plan, initially adopted in 2008; and

WHEREAS, the [City Council/Village Board] conducted a public hearing on _____, 2013, to accept public input concerning the updated plan; and

WHEREAS, the [City Council/Village Board] makes the following findings:

1. Natural disasters do pose a tangible threat to residents and property.
2. Undertaking hazard mitigation actions before disasters occur will reduce the potential for harm to residents and property and save taxpayer dollars.
3. Preparation of this plan is in the public interest.
4. This plan is intended to serve as a general strategy and may be amended from time to time.
5. Nothing in this plan obligates the [city/village] to undertake any of the recommended activities and/or projects.

NOW THEREFORE, BE IT RESOLVED, the City/Village of _____ hereby adopts the Jefferson County Natural Hazards Mitigation Plan: 2013-2017; and

BE IT FURTHER RESOLVED, the [City/ Village] Clerk is directed to send a signed copy of this resolution, at [his/her] earliest convenience, to Donna Haugom, Emergency Management Director, at the following address: Jefferson County Courthouse; Emergency Management Office; 411 S Center Avenue; Jefferson, WI 53549.

Adopted this __ day of _____, 2013

Attest:

_____ _____

___, [Mayor/Village President] [City/Village] Clerk

R-1

City of Whitewater Council Agenda Item Information Sheet

MEETING DATE: **08/06/2013** ITEM: **Jefferson Co. Hazards Mitigation Plan Update**

PRESENTER: **City Manager**

PREVIOUS ACTION, IF ANY: **None.**

SUMMARY OF ITEM BEING PRESENTED:
The Jefferson County Office of Emergency Management recently completed their 5-year update to the Jefferson County Hazards Mitigation Plan. An executive summary will be included with your packet materials for this item. Staff recommends adoption of the resolution.

BUDGET IMPACT, IF ANY: **None.**

BOARD, COMMISSION, OR COMMITTEE RECOMMENDATION, IF ANY: **None**

STAFF RECOMMENDATION: **City Manager recommends adoption of the drafted resolution.**

RECOMMENDED MOTION: **None**

ATTACHMENT(S) INCLUDED (If none, please state that): **None.**

FOR MORE INFORMATION CONTACT:
Cameron Clapper, City Manager, 262.473.0100, cclapper@whitewater-wi.gov.

Jefferson County Natural Hazards Mitigation Plan: 2013-2017
5-Year Update

R-1

Executive Summary

1. General Overview

In an effort to curb rising costs associated with natural disasters, the federal government adopted the Disaster Mitigation Act of 2000 (DMA 2000). It amended the Robert T. Stafford Disaster Relief and Emergency Act, which is the primary law at the federal level dealing with disaster planning, mitigation, response, and recovery.

DMA 2000 reinforced the importance of hazard mitigation planning to proactively devise strategies intended to avoid and reduce the negative effects of natural disasters. If a community wants to apply for grant funding from the Pre-Disaster Mitigation (PDM) Program or the Hazard Mitigation Grant Program (HMGP), it must have an approved hazard mitigation plan. If a disaster strikes a community that does not have an approved plan, it can only receive funding if it agrees to prepare a plan within one year.

Jefferson County and participating municipalities prepared a plan to meet this new requirement in 2008, and in so doing, helped its citizens mitigate the effects of natural disasters. Consistent with federal law, the county is undertaking a comprehensive five-year update of the 2008 plan. Although a plan must meet minimum requirements, this plan is an expression of local needs and priorities.

2. Plan Contents

The plan consists of six chapters, a map series, and a number of appendices. The first chapter provides an overview of the project. The second chapter reviews background information about Jefferson County including its setting, demographic and economic characteristics, climate, natural resources, land use, and development trends. Chapter 3 presents background information related to special needs populations and groups in the county. Chapter 4 contains a complete inventory of critical facilities in the county. Natural hazards are identified and reviewed in the fifth chapter along with estimated losses to buildings, infrastructure, and critical facilities. In chapter 6, mitigation strategies are reviewed and goals, objectives, and policies are identified that will help to craft appropriate solutions to the identified problems. A range of activities are presented to help foster hazard mitigation efforts. Various funding sources are also reviewed with an eye towards identifying options for funding identified projects. All of the maps in the plan are included in the final section of the plan.

The plan focuses on 12 types of natural hazards:

- dam failure
- flooding
- ice shoves
- dense fog
- tornado and high winds
- hailstorms
- thunderstorms
- winter storms
- extreme heat and cold
- drought
- wildland fire

As part of the inventory phase, more than 610 critical facilities in the county were identified including:

- bridges
- dams
- public-use airports
- telecommunication towers
- telephone facilities
- electric facilities
- natural gas facilities
- petroleum pipeline facilities
- public water facilities
- wastewater facilities
- fire and police services
- National Guard facilities
- government facilities
- schools (public and private)
- special care facilities-residential
- special care facilities-nonresidential
- health care facilities
- vulnerable housing, such as manufactured/mobile home parks and campgrounds

3. Goals, Objectives, Policies, and Activities

The most important part of the plan is Chapter 6, which presents a unified plan of action to mitigate the effects of hazards on property, people, and assets. It lists goals, objectives, and policies that should guide decision-makers and other officials. Goals are intended to describe an end state, usually in general terms. In contrast, objectives describe an end state in measurable and specific terms. Policies give clear direction on what will be done to help achieve a goal and objective.

Following the listing of goals, objectives, and policies, a chart lists specific action items along with estimated implementation costs. Responsible entities are listed for each so that implementation is well defined. The activity charts are a work in progress. As items are completed they should be deleted and as new opportunities or issues arise items will be added. Further, depending on available resources, including funding and staff time, priorities may change.

Activities are prioritized as low, medium, or high. Cost estimates are provided to help formulate funding priorities. When a project is to be undertaken, a more detailed budget should be prepared to assess a project's cost. At that time a benefit cost analysis should be completed to show how the benefits of the project compare to anticipated costs. Federal funding for mitigation activities can only be obtained when benefits clearly outweigh the costs.

Goal 1. Public Education

Provide the public with the education they need to adequately prepare for and respond to natural hazards identified in this plan including dam failure, flooding, ice shoves, fog, tornado/high winds, hailstorms, thunderstorms, winter storms, extreme temperature, drought, and wildland fire. **(2008 Plan)**

Objectives

1. Strengthen emergency service preparedness and response by enhancing public education throughout the county. **(2008 Plan)**
2. Increase the number of households that have prepared a family emergency plan. **(2008 Plan)**
3. Increase the number of public outreach materials in Spanish. **(2008 Plan)**

Policies

1. Work with non-governmental organizations (youth, service, professional, religious) to promote mitigation education and awareness. **(2008 Plan)**
2. Look for multiple and varied opportunities to disseminate educational information to county residents. **(2008 Plan)**

Implementation Actions / Strategies	Cost Estimate (2012)	Priority	Schedule 2013 to 2017	Schedule 2018 to 2022	Responsible Entity
1. Develop, enhance, and implement education programs aimed at mitigating natural hazards and reducing the risk to citizens, public agencies, private property owners, businesses, and schools. **(2008 Plan; 2012 status – no action)**	$5,000	Medium	X	X	Jefferson County Emergency Management; American Red Cross
2. Create displays for use at public events (health fair, public awareness day, county fair). **(2008 Plan; 2012 status – ongoing effort)**	Staff time and supplies	Low	X	X	Jefferson County Emergency Management
3. Establish a single webpage on the county's website to provide up-to-date hazard-related information. **(2008 Plan; 2012 status – ongoing effort)**	Staff time	Medium	X	X	Jefferson County Emergency Management
4. Work with the schools within the county to promote hazard mitigation education and awareness and discuss ways to better integrate mitigation into the curriculum. **(2008 Plan; 2012 status – no action)**	Staff time	Medium	X	X	Jefferson County Emergency Management; American Red Cross
5. Identify, improve, and sustain collaborative programs focusing on the real estate and insurance industries, public and private sector organizations, and individuals to avoid activity that increases risk to natural hazards. **(2008 Plan; 2012 status – no action)**	Staff time	Medium	X		Jefferson County Emergency Management; American Red Cross; cities of Fort Atkinson, Jefferson, Lake Mills, Waterloo, Watertown, and Whitewater; villages of Cambridge, Johnson Creek, Lac La Belle, Palmyra, and Sullivan
6. Develop and maintain a geographic database for natural hazard events, including location, weather conditions, and resulting damage. **(2008 Plan; 2012 status – no action)**	Staff time	High	X		Jefferson County Emergency Management; Jefferson County Land Information Office
7. Work to provide more hazard-related information in Spanish. **(2008 Plan; 2012 status – ongoing effort)**	Staff time	Medium	X		Jefferson County Emergency Management Jefferson County Literacy Council; United Migrant Opportunity Service; Jefferson County Public Health; Workforce Development

Goal 2. Flooding
Protect the public health, safety, and welfare of county residents and public and private property during flood events. **(2008 Plan)**

Objectives
1. Minimize the impact of flooding on potentially affected structures. **(2008 Plan)**
2. Decrease the number of structures currently located in the 100-year floodplain that are not properly flood-proofed. **(2008 Plan)**
3. Minimize the amount of impervious surface in new development projects to allow more infiltration of stormwater into the ground. **(2008 Plan)**
4. Decrease the number of repetitive loss properties. **(2008 Plan)**
5. Decrease the number of repetitive loss communities in the county. **(2008 Plan)**
6. Increase public awareness of flooding. **(2008 Plan)**
7. Improve communication between the county and local units of government when floods occur or are likely to occur. **(2008 Plan)**

Policies
1. Continue to enforce floodplain regulations to ensure that future development in the 100-year floodplain meets established standards. **(2008 Plan)**
2. Continue the buyout program on Blackhawk Island. **(2008 Plan)**
3. Support the identification and conservation of land with high flood mitigation value (e.g., wetlands, upland storage, and infiltration areas). **(2008 Plan)**
4. Support land acquisition and other management strategies to preserve open space for flood mitigation purposes. **(2008 Plan)**
5. Ensure that governmental officials and employees, county residents, and real estate agents are aware of floodplain regulations. **(2008 Plan)**
6. Ensure that people owning property in the 100-year floodplain, and their agents, notify buyers when selling their property. **(2008 Plan)**
7. Adopt standards to control the proportion of a site that can be covered with impervious surfaces. **(2008 Plan)**
8. Locate public infrastructure outside of the 100-year floodplain. When infrastructure has be located in the 100-year floodplain, it should be flood proofed or otherwise protected from flood water. **(2008 Plan)**
9. Design and properly size all new stream crossings to not create a significant upstream back-water effect. **(2008 Plan)**
10. Continue to enforce stormwater management regulations. **(2008 Plan)**
11. Use data records in on-going assessment of flood problems and effectiveness or response programs. **(2008 Plan)**
12. Formalize communications links and establish procedures. **(2008 Plan)**
13. Update flood insurance rate maps (FIRMs) when it can be shown that they are substantially inaccurate. **(2008 Plan)**
14. Ensure that all large dams in the county have emergency action plans and that they are up to date. **(2008 Plan)**
15. Undertake such activities as may be required to remain compliant with the requirements of the National Flood Insurance Program. **(2008 Plan)**

Implementation Actions / Strategies	Cost Estimate (2012)	Priority	Schedule 2013 to 2017	Schedule 2018 to 2022	Responsible Entity
1. Identify and analyze feasible mitigation options for repetitive flood properties. **(2008 Plan; 2012 status – ongoing effort)**	Staff time	Medium	X	X	Jefferson County Emergency Management
2. Apply for funding through the federal Hazard Mitigation Grant program, Flood Mitigation Assistance Program, and the Pre-Disaster Mitigation Program as well as any other resources that may be available to help flood proof repetitive loss sites or remove them through acquisition followed by demolition or relocation. **(2008 Plan; 2012 status – in progress)**	Staff time	High	X	X	Jefferson County Emergency Management; cities of Fort Atkinson, Jefferson, and Watertown; village of Cambridge
3. Design and budget for stormwater management facilities consistent with adopted stormwater management plans than have been or will be prepared / amended. **(2008 Plan; 2012 status – no action)**	Staff time	Medium	X		Jefferson County Emergency Management; cities of Fort Atkinson, Jefferson, Lake Mills, Waterloo, Watertown, and Whitewater; villages of Cambridge, Johnson Creek, Lac La Belle, Palmyra, and Sullivan as appropriate
4. Develop a computerized database containing information on each culvert and bridge within the county. **(2008 Plan; 2012 status – in progress)**	Staff time	Medium	X		Jefferson County Emergency Management; American Red Cross

Continued on next page

Continued

Implementation Actions / Strategies	Cost Estimate (2012)	Priority	Schedule 2013 to 2017	Schedule 2018 to 2022	Responsible Entity
5. Identify those culverts and bridges that are undersized or are otherwise unable to handle expected flood flows. **(2008 Plan; 2012 status – ongoing effort)**	Staff time	Medium	X		Jefferson County Emergency Management; cities of Fort Atkinson, Jefferson, Lake Mills, Waterloo, Watertown, and Whitewater; villages of Cambridge, Johnson Creek, Lac La Belle, Palmyra, and Sullivan as appropriate
6. Develop a geographic database for public roadways that are susceptible to flooding. **(2008 Plan; 2012 status – ongoing)**	Staff time	Medium	X		Jefferson County Emergency Management cities of Fort Atkinson, Jefferson, Lake Mills, Waterloo, Watertown, and Whitewater; villages of Cambridge, Johnson Creek, Lac La Belle, Palmyra, and Sullivan as appropriate
7. Prepare a strategy to prioritize road improvements for public roadways that are susceptible to flooding. **(2008 Plan; 2012 status – no action)**	Staff time	Medium	X		Jefferson County Emergency Management; ; cities of Fort Atkinson, Jefferson, Lake Mills, Waterloo, Watertown, and Whitewater; villages of Cambridge, Johnson Creek, Lac La Belle, Palmyra, and Sullivan as appropriate
8. Identify undeveloped areas of the county, if any, that have flood mitigation value and develop appropriate strategies to protect them. **(2008 Plan; 2012 status – no action)**	Staff time	Medium	X		Jefferson County Emergency Management; ; cities of Fort Atkinson, Jefferson, Lake Mills, Waterloo, Watertown, and Whitewater; villages of Cambridge, Johnson Creek, Lac La Belle, Palmyra, and Sullivan as appropriate
9. Establish a framework to compile and coordinate surface water management plans and data throughout Jefferson County. **(2008 Plan; 2012 status – no action)**	Staff time	Medium	X		Jefferson County Emergency Management; cities of Fort Atkinson, Jefferson, Lake Mills, Waterloo, Watertown, and Whitewater; villages of Cambridge, Johnson Creek, Lac La Belle, Palmyra, and Sullivan as appropriate
10. Post flood recovery plans and programs to help county residents rebuild and implement mitigation measures to protect against future floods. **(2008 Plan; 2012 status – ongoing effort)**	Staff time	Medium	X	X	Jefferson County Emergency Management; ; cities of Fort Atkinson, Jefferson, Lake Mills, Waterloo, Watertown, and Whitewater; villages of Cambridge, Johnson Creek, Lac La Belle, Palmyra, and Sullivan
11. Distribute National Flood Insurance Program information. **(2008 Plan; 2012 status – no action)**	Staff time	Medium	X	X	Jefferson County Emergency Management; ; cities of Fort Atkinson, Jefferson, Lake Mills, Waterloo, Watertown, and Whitewater; villages of Cambridge, Johnson Creek, Lac La Belle, Palmyra, and Sullivan
12. Explore options for improving the ability of local units of government to report flooding, receive information, and request assistance. **(2008 Plan; 2012 status – no action)**	Staff time	Medium	X		Jefferson County Emergency Management; cities of Fort Atkinson, Jefferson, Lake Mills, Waterloo, Watertown, and Whitewater; villages of Cambridge, Johnson Creek, Lac La Belle, Palmyra, and Sullivan

Continued on next page

Continued

Implementation Actions / Strategies	Cost Estimate (2012)	Priority	Schedule 2013 to 2017	Schedule 2018 to 2022	Responsible Entity
13. Develop and maintain a geographic database for natural hazard events, including location, weather conditions, and resulting damage. (**2008 Plan; 2012 status – no action**)	Staff time	High	X	X	Jefferson County Emergency Management; cities of Fort Atkinson, Jefferson, Lake Mills, Waterloo, Watertown, and Whitewater; villages of Cambridge, Johnson Creek, Lac La Belle, Palmyra, and Sullivan
14. Evaluate the support for and the feasibility of becoming part of the Community Rating System (CRS) to lower flood insurance premiums for property owners. (**2008 Plan; 2012 status – ongoing effort**)	Staff time	High	X		Jefferson County Emergency Management; cities of Fort Atkinson, Jefferson, Lake Mills, Waterloo, Watertown, and Whitewater; villages of Cambridge, Johnson Creek, Lac La Belle, Palmyra, and Sullivan
15. Work with the DNR to ensure that an emergency action plan is prepared for large dams and that they are periodically updated. (**2008 Plan; 2012 status – no action**)	Staff time	Medium	X		Jefferson County Emergency Management
16. Develop a prioritized list of areas of the county meriting detailed flood studies. (**2008 Plan; 2012 status – ongoing effort**)	Staff time	Medium	X		Jefferson County Emergency Management
17. Install a surface water gaging station on the Crawfish River near Hubbleton. (**2008 Plan; 2012 status – no action**)	Staff time	Medium	X		Jefferson County Emergency Management
18. Ensure that privately-owned large dams are inspected consistent with state law. (**2008 Plan; 2012 status – no action**)	Staff time	Medium	X		Jefferson County Emergency Management; Cities of Fort Atkinson, Jefferson, Lake Mills, Waterloo, Watertown, and Whitewater; villages of Cambridge, Johnson Creek, Lac La Belle, Palmyra, and Sullivan as appropriate
19. Inspect publicly-owned large dams consistent with state law. (**2008 Plan; 2012 status – no action**)	Staff time	Medium	X		Cities of Fort Atkinson, Jefferson, Lake Mills, Waterloo, Watertown, and Whitewater; villages of Cambridge, Johnson Creek, Lac La Belle, Palmyra, and Sullivan as appropriate
20. Revise existing floodplain regulations to ensure they comply with the most recent (2006) model floodplain regulations developed by the Wisconsin Department of Natural Resources. (**2008 Plan; 2012 status – ongoing effort**)	Staff time	High	X		Cities of Fort Atkinson, Jefferson, Lake Mills, Waterloo, Watertown, and Whitewater; villages of Cambridge, Johnson Creek, Lac La Belle, Palmyra, and Sullivan as appropriate
21. Conduct a study to determine feasible and cost effective solutions to minimize flooding in downtown Waterloo (Maunesha River). (**2008 Plan; 2012 status – in progress**)	$8,000 to $12,000	High	X		City of Waterloo
22. Enhance the 1.6-acre site the City acquired in 2012 for flood storage and restore the stream channel and other related efforts (**2012 status – new action item**)	Unknown	High	X		City of Waterloo
23. Repair the Mill Road Dam. (**2008 Plan; 2012 status – ongoing effort**)	Unknown	High	X		Village of Palmyra
24. Mitigation projects as may be identified as a result of the Water Resources Management Study within the Village of Johnson Creek. (**2008 Plan; 2012 status – no action**)	Variable	Variable	X		Village of Johnson Creek

Continued

Implementation Actions / Strategies	Cost Estimate (2012)	Priority	Schedule 2013 to 2017	Schedule 2018 to 2022	Responsible Entity
25. Enlarge the capacity of the city's (Watertown) stormwater sewer system which may include detention basins (**2012 status – new action item**)	Unknown	Medium	X	X	City of Watertown
26. Complete a dam failure analysis for the Spring Lake Dam (**2012 status – new action item**)	Cost included in current budget	High	X		Village of Palmyra

Goal 3. Tornadoes
Lessen the effects of a tornado to the extent feasible and speed recovery following an event. **(2008 Plan)**

Objectives
1. Increase public education and awareness of the potential severity of tornadoes. **(2008 Plan)**
2. Minimize the amount of time that businesses damaged by a tornado are not operational. **(2008 Plan)**
3. Minimize the amount of time it takes to rebuild or restore dwellings damaged by a tornado. **(2008 Plan)**
4. Prevent injuries and death from tornadoes. **(2008 Plan)**

Policies
1. Bury overhead power and utility lines where feasible as a way to reduce power outages during all types of storm events. **(2008 Plan)**
2. Require that mobile homes and manufactured housing are securely anchored in place. **(2008 Plan)**
3. Ensure that adequate tornado shelters are available to county residents especially those living in mobile home parks. **(2008 Plan)**
4. Include redevelopment objectives in smart growth comprehensive plans to support post-disaster development activities. **(2008 Plan)**
5. Continue to support the efforts of severe weather spotters. **(2008 Plan)**
6. Keep the current siren system functioning and in good repair. **(2008 Plan)**
7. Encourage residents to obtain NOAA weather radios especially in those areas of the county that are not covered by a siren. **(2008 Plan)**

Implementation Actions / Strategies	Cost Estimate (2012)	Priority	Schedule 2013 to 2017	Schedule 2018 to 2022	Responsible Entity
1. Periodically assess whether there are enough shelters to house displaced persons. **(2008 Plan; 2012 status – ongoing effort)**	Staff time	Medium	X	X	Jefferson County Emergency Management; American Red Cross
2. Apply for mitigation funding to purchase NOAA weather radios for county residents. **(2008 Plan; 2012 status – no action)**	Staff time	Low	X		Jefferson County Emergency Management; cities of Fort Atkinson, Jefferson, Lake Mills, Waterloo, Watertown, and Whitewater; villages of Cambridge, Johnson Creek, Lac La Belle, Palmyra, and Sullivan
3. Study the feasibility of and support for adopting a local regulation which would require new mobile home parks and future expansions of existing parks to provide for a tornado shelter. **(2008 Plan; 2012 status – no action)**	Staff time	Medium	X		Jefferson County Emergency Management
4. Develop and implement strategies for debris management. **(2008 Plan; 2012 status – in progress)**	Staff time	Medium	X		Jefferson County Emergency Management; American Red Cross; cities of Fort Atkinson, Jefferson, Lake Mills, Waterloo, Watertown, and Whitewater; villages of Cambridge, Johnson Creek, Lac La Belle, Palmyra, and Sullivan
5. Amend land development regulations to require a storm shelter in mobile home parks when the number of mobile homes exceeds a threshold as established by the jurisdiction. **(2008 Plan; 2012 status – no action)**	Staff time	Medium	X		Jefferson County Zoning Department; Jefferson County Emergency Management; cities of Fort Atkinson, Jefferson, Lake Mills, Waterloo, Watertown, and Whitewater; villages of Cambridge, Johnson Creek, Lac La Belle, Palmyra, and Sullivan
6. Install storm shelters near or in existing mobile home parks and high occupancy campgrounds, such as Bark River Campground & Resort and River Bend. **(2008 Plan; 2012 status – no action)**	Staff time	Medium	X		Mobile home park operators and campground operations with Jefferson County Emergency Management
7. Investigate grant funding for storm shelters. **(New 2012)**	Staff time	Medium	X		Jefferson County Emergency Management
8. Develop and maintain a geographic database for natural hazard events, including location, weather conditions, and resulting damage. **(2008 Plan; 2012 status – no action)**	Staff time	High	X		Jefferson County Emergency Management; Jefferson County Land Information Office
9. Update and improve sirens **(2012 status – new action item)**	Unknown	Medium	X	X	City of Watertown

Goal 4. Extreme Temperature
Protect the health of Jefferson County residents from extreme temperature. (**2008 Plan**)

Objectives
1. Prevent deaths from extreme temperature. (**2008 Plan**)

Policies
1. Encourage volunteers to look after vulnerable individuals, especially the elderly, during times of extreme temperature. (**2008 Plan**)
2. Open county and other public facilities with air conditioning as appropriate for public access during periods of extreme heat. (**2008 Plan**)
3. Ensure that county residents are aware that there are different forms of assistance to help qualified individuals pay their winter heating costs. (**2008 Plan**)

Implementation Actions / Strategies	Cost Estimate (2012)	Priority	Schedule 2013 to 2017	Schedule 2018 to 2022	Responsible Entity
1. Develop a directory of public buildings that would be open to the public during heat waves. (**2008 Plan; 2012 status – in progress**)	Staff time	Medium	X	X	Jefferson County Emergency Management; cities of Fort Atkinson, Jefferson, Lake Mills, Waterloo, Watertown, and Whitewater; villages of Cambridge, Johnson Creek, Lac La Belle, Palmyra, and Sullivan
2. Call a meeting of public and nonprofit organizations that may be able to mobilize a volunteer corps of individuals willing to assist vulnerable people during periods of extreme temperature. (**2008 Plan; 2012 status – no action**)	Staff time	High	X		Jefferson County Emergency Management; cities of Fort Atkinson, Jefferson, Lake Mills, Waterloo, Watertown, and Whitewater; villages of Cambridge, Johnson Creek, Lac La Belle, Palmyra, and Sullivan
3. Investigate the possibility of establishing a database of individuals who are vulnerable to extreme temperature and who have voluntarily placed their name on the call list. (**2008 Plan; 2012 status – in progress**)	Staff time	Medium	X		Jefferson County Volunteer Organization Acting in Disasters (VOAD); Jefferson County Emergency Management; Jefferson County Public Health
4. Publicise available programs that help residents pay for their utility expenses. (**2008 Plan; 2012 status – no action**)	Staff time	Medium	X		Jefferson County Emergency Management; cities of Fort Atkinson, Jefferson, Lake Mills, Waterloo, Watertown, and Whitewater; villages of Cambridge, Johnson Creek, Lac La Belle, Palmyra, and Sullivan
5. Develop and maintain a geographic database for natural hazard events, including location, weather conditions, and resulting damage. (**2008 Plan; 2012 status – no action**)	Staff time	High	X		Jefferson County Emergency Management; Jefferson County Land Information Office
6. Amend the county's emergency operations plan to address extreme temperatures. (**2008 Plan; 2012 status – ongoing effort**)	Staff time	High	X		Jefferson County Emergency Management; American Red Cross; cities of Fort Atkinson, Jefferson, Lake Mills, Waterloo, Watertown, and Whitewater; villages of Cambridge, Johnson Creek, Lac La Belle, Palmyra, and Sullivan

Goal 5. Severe Storms, Hail, & High Winds
Protect and prepare Jefferson County residents from the dangers of extreme weather. **(2008 Plan)**

Objectives
1. Increase public education and awareness of the potential dangers of thunderstorms, snow storms, hail, and windstorms. **(2008 Plan)**

Policies
1. Bury overhead power and utility lines where feasible as a way to reduce power outages during all types of storm events. **(2008 Plan)**
2. Provide citizens with early storm warnings. **(2008 Plan)**
3. Encourage the use of surge protectors on critical electronic equipment in governmental and critical facilities. **(2008 Plan)**
4. Work with utility companies to assess and to improve, when necessary, electric service reliability. **(2008 Plan)**
5. Work with utility companies to ensure that trees are properly trimmed near utility lines. **(2008 Plan)**

Implementation Actions / Strategies	Cost Estimate (2012)	Priority	Schedule 2013 to 2017	Schedule 2018 to 2022	Responsible Entity
1. Continue to update and/or monitor the County's public early warning system and network. **(2008 Plan; 2012 status – no action)**	Staff time	Medium	X	X	Jefferson County Emergency Management
2. Review local building codes to determine if revisions are needed to improve the structure's ability to withstand greater wind velocities and encourage provision of safe rooms, especially in structures that do not have a basement. **(2008 Plan; 2012 status – no action)**	Staff time	Low	X		Jefferson County Emergency Management; cities of Fort Atkinson, Jefferson, Lake Mills, Waterloo, Watertown, and Whitewater; villages of Cambridge, Johnson Creek, Lac La Belle, Palmyra, and Sullivan
3. Review local building codes to determine if revisions are needed to add requirements for hail-impact resistant roofing and other materials. **(2008 Plan; 2012 status – no action)**	Staff time	Low	X		Jefferson County Emergency Management
4. Produce and distribute emergency preparedness information related to thunderstorms, snow storms, hailstorms, and windstorm hazards. **(2008 Plan; 2012 status – ongoing effort)**	Staff time	Medium	X		Jefferson County Emergency Management; American Red Cross
5. Identify and pursue funding opportunities to develop and implement local and county mitigation activities. **(2008 Plan; 2012 status – ongoing effort)**	Staff time	Medium	X		Jefferson County Emergency Management; American Red Cross; cities of Fort Atkinson, Jefferson, Lake Mills, Waterloo, Watertown, and Whitewater; villages of Cambridge, Johnson Creek, Lac La Belle, Palmyra, and Sullivan
6. Install lightning grade surge protection devices for critical electronic components used by government, public service, and public safety facilities, such as warning systems, control systems, communications, and computers. **(2008 Plan; 2012 status – ongoing effort)**	$3,000	Medium	X		Jefferson County Emergency Management; American Red Cross; cities of Fort Atkinson, Jefferson, Lake Mills, Waterloo, Watertown, and Whitewater; villages of Cambridge, Johnson Creek, Lac La Belle, Palmyra, and Sullivan
7. Provide the public with information about proven lightning safety guidelines to reduce the risk of lightning hazards. **(2008 Plan; 2012 status – ongoing effort)**	Staff time	Medium	X		Jefferson County Emergency Management; cities of Fort Atkinson, Jefferson, Lake Mills, Waterloo, Watertown, and Whitewater; villages of Cambridge, Johnson Creek, Lac La Belle, Palmyra, and Sullivan

Continued on next page

Continued

Implementation Actions / Strategies	Cost Estimate (2012)	Priority	Schedule 2013 to 2017	Schedule 2018 to 2022	Responsible Entity
8. Develop and implement strategies for debris management. (2008 Plan; 2012 status – ongoing effort)	Staff time	Medium	X		Jefferson County Emergency Management; cities of Fort Atkinson, Jefferson, Lake Mills, Waterloo, Watertown, and Whitewater; villages of Cambridge, Johnson Creek, Lac La Belle, Palmyra, and Sullivan
9. Apply for mitigation funding to purchase NOAA weather radios for county residents. (2008 Plan; 2012 status – no action)	Staff time	Medium	X		Jefferson County Emergency Management
10. Develop and maintain a geographic database for natural hazard events, including location, weather conditions, and resulting damage. (2008 Plan; 2012 status – no action)	Staff time	High	X		Jefferson County Emergency Management; Jefferson County Land Information Office

Goal 6. Drought

Protect the public health, safety, and welfare of Jefferson County residents during periods of drought. (2008 Plan)

Objectives

1. Decrease water consumption during periods of drought. (2008 Plan)
2. Minimize the economic impacts of drought on the local economy. (2008 Plan)

Policies

1. Encourage water conservation during periods of drought. (2008 Plan)
2. Impose watering restrictions during periods of extreme drought. (2008 Plan)
3. Work with multiple agencies to conserve water, provide drought prediction, and provide stream and groundwater monitoring. (2008 Plan)
4. Work with agencies that can assist with and promote soil health, preserve soil moisture and help to minimize the loss of the crops and topsoil in the event of a drought. (2008 Plan)
5. Continue to monitor groundwater levels to identify the status of groundwater resources and trends. (2008 Plan)
6. Work cooperatively with state agencies and other levels of government in developing appropriate strategies on a regional basis. (2008 Plan)
7. Provide water for livestock when the needs of humans have been or are being met. (2008 Plan)

Implementation Actions / Strategies	Cost Estimate (2012)	Priority	Schedule 2013 to 2017	Schedule 2018 to 2022	Responsible Entity
1. Create an ordinance to prioritize or control water use during drought conditions. (2008 Plan; 2012 status – no action)	Staff time	Medium	X	X	Municipalities with public water systems
2. Provide public education about the potential severity of drought events. (2008 Plan; 2012 status – no action)	Staff time	Low	X		Jefferson County Emergency Management, cities of Fort Atkinson, Jefferson, Lake Mills, Waterloo, Watertown, and Whitewater; villages of Cambridge, Johnson Creek, Lac La Belle, Palmyra, and Sullivan
3. Develop a set of procedures for water distribution during drought to those in need. (2008 Plan; 2012 status – no action)	Staff time	Medium	X		Jefferson County Emergency Management
4. Develop and maintain a geographic database for natural hazard events, including location, weather conditions, and resulting damage. (2008 Plan; 2012 status – no action)	Staff time	High	X		Jefferson County Emergency Management; Jefferson County Land Information Office

Goal 7. Wildland Fire
Protect structures and residents in Jefferson County from the hazard of uncontrolled wildfire. **(2008 Plan)**

Objectives
1. Decrease the number of wildland fires occurring in the county. **(2008 Plan)**
2. Decrease the number of acres burned from wildland fires. **(2008 Plan)**
3. Increase public education. **(2008 Plan)**

Policies
1. Support the use of controlled burns as a way of reducing the threat of dangerous wildland fires. **(2008 Plan)**
2. Enhance emergency services to increase the efficiency of wildfire response and recovery activities. **(2008 Plan)**
3. Keep track of wildfire events in the county to better document the extent and location of these events. **(2008 Plan)**

Implementation Actions / Strategies	Cost Estimate (2012)	Priority	Schedule 2013 to 2017	Schedule 2018 to 2022	Responsible Entity
1. Apply for federal and state grants to enhance the capability of local fire departments. **(2008 Plan; 2012 status – no action)**	Staff time	Medium	X	X	Jefferson County Emergency Management; local fire departments
2. Provide education to county and municipality personnel about federal cost-share and grant programs, Fire Protection Agreements, and other related federal programs so the full array of assistance available to local agencies is understood. **(2008 Plan; 2012 status – no action)**	Staff time	Low	X		Jefferson County Emergency Management; cities of Fort Atkinson, Jefferson, Lake Mills, Waterloo, Watertown, and Whitewater; villages of Cambridge, Johnson Creek, Lac La Belle, Palmyra, and Sullivan
3. Study the feasibility of and support for adopting a local burning permit program at the Town level. **(2008 Plan; 2012 status – no action)**	Staff time	Medium	X		Jefferson County Emergency Management; cities of Fort Atkinson, Jefferson, Lake Mills, Waterloo, Watertown, and Whitewater; villages of Cambridge, Johnson Creek, Lac La Belle, Palmyra, and Sullivan
4. Develop a database to keep track of wildfire events in the county. **(2008 Plan; 2012 status – no action)**	Staff time	Medium	X		Jefferson County Emergency Management; American Red Cross
5. Develop and maintain a geographic database for natural hazard events, including location, weather conditions, and resulting damage. **(2008 Plan; 2012 status – no action)**	Staff time	High	X		Jefferson County Emergency Management; Jefferson County Land Information Office
6. Investigate the establishment of a uniform way of providing information to the public regarding issuance of burning permits. **(2008 Plan; 2012 status – no action)**	Staff time	High	X		Jefferson County Sheriff's Department; local fire departments

ORDINANCE NO.:_____

ORDINANCE AMENDING CHAPTER 2.56
LIBRARY BOARD

The Common Council of the City of Whitewater, Walworth and Jefferson Counties, Wisconsin, do hereby ordain as follows:

Section 1: Whitewater Municipal Code, Chapter 2.56, subsection 2.56.010 is hereby amended to read as follows:

2.56.010 - Membership

The library board shall consist of seven members who shall be appointed pursuant to the terms of Whitewater Municipal Ordinance Chapter 2.12 and whose appointments shall be confirmed by the Common Council. Members shall be residents of the municipality, except that not more than two members may be residents of towns adjacent to the municipality. Upon their first appointment, the members shall be divided as follows: Three members shall serve for three years, two members shall serve for two years, and one to serve from one year from ~~July~~ May first in the year of their appointment. Each regular appointment shall be for a term of three years. The appointing authority shall appoint as one of the members a school district administrator, or his or her representative, to represent the public school district or districts in which the public library is located. Not more than one member of the municipal governing body shall be a member of the library board.

Ordinance introduced by Councilmember _____, who moved its adoption. Seconded by Councilmember _____.

AYES:

NOES:

ABSENT:

ADOPTED:

_____
Cameron Clapper, City Manager

_____
Michele R. Smith, City Clerk

ORDINANCE NO. _____
ORDINANCE AMENDING CHAPTER 9.08 CONCERNING
FEES FOR DOG LICENSES

The Common Council of the City of Whitewater, Walworth and Jefferson Counties, Wisconsin, do hereby ordain as follows:

Section 1. Whitewater Municipal Code Chapter 9.08, Section 9.08.020(d) is hereby amended to read as follows:

(d)

Fees.

(1)

A license shall be issued after payment of the applicable fee:

(A)

For each unneutered male dog, ~~fifteen~~ Twenty dollars;

(B)

For each neutered male dog, ~~ten~~ Fifteen dollars;

(C)

For each unspayed female dog, ~~fifteen~~ Twenty dollars;

(D)

For each spayed female dog, ~~ten~~ Fifteen dollars.

Section 2. This ordinance shall take effect upon passage and publication as provided by law.

Ordinance introduced by Council member _____, who moved its adoption. Seconded by Council member _____.

AYES:

NOES:

ABSENT:

ADOPTED:

_____
Cameron Clapper, City Manager

_____
Michele R. Smith, City Clerk

C-1

City of WHITEWATER

City of Whitewater Council Agenda Item Information Sheet

MEETING DATE: **08/06/2013** ITEM: **Fraternity Lift Station Generator**

PRESENTER: **Wastewater Superintendent**

PREVIOUS ACTION, IF ANY: **None**

SUMMARY OF ITEM BEING PRESENTED: **A consistent power supply is critical at the Fraternity Lane lift station due to short hydraulic detention time at this location. Therefore, the lift station was slated to have a dedicated backup generator installed per the 2013 budget. This will be a "turn key" project with the exception of site remediation. This installation will provide increased service assurance during power outage occurrences. The work site has been surveyed and the adjacent property owner has been contacted regarding this work. The balance remaining over the budgeted amount would be charged to the Wastewater Utility sewer repair and maintenance fund.**

BUDGET IMPACT, IF ANY: **This was budgeted out of the Capital Equipment Acct. for the Wastewater Utility in the amount of $25,000.00.**

BOARD, COMMISSION, OR COMMITTEE RECOMMENDATION, IF ANY: **None**

STAFF RECOMMENDATION: **Recommend approval of contract with Cummins NPower, LLC in the amount of $26,728.00.**

RECOMMENDED MOTION: **To approve the recommendation noted above.**

ATTACHMENT(S) INCLUDED (If none, please state that)
Bid Summary with three competitive bids.
Site Layout

FOR MORE INFORMATION CONTACT:
Tim Reel, treel@whitewater-wi.gov, 262.473.5920.

CITY OF WHITEWATER
INTEROFFICE MEMORANDUM

TO: CAMERON CLAPPER, CITY MANAGER

FROM: TIM REEL, WASTEWATER SUPERINTENDENT

SUBJECT: FRATERNITY LIFT STATION GENERATOR BID SUMMARY

DATE: 08/01/2013

CC: CITY COUNCIL

Three quotes were received after site visits from each contractor. The prices received were:

Cummins NPower, LLC 800 W. Ryan Rd Oak Creek, WI 53154	$26,728.00
Wolter Power Systems 3125 Intertech Dr. Brookfield, WI 53045	$28,627.00
Home Backup Systems PO Box 447 Fort Atkinson, WI 53538	$30,195.00

C-1
33'
33'
W. Florence Street
Telephone Pedestal
18.08'
55.48'
7.2'
5'
6.2'
Lift Station
7' X 7.8'
Generator
5' X 9'
55'
N. Fraternity Lane
35'
35'

C-2

City of Whitewater Council Agenda Item Information Sheet

MEETING DATE: **08/06/2013** ITEM: **Sanitary Sewer Smoke Testing**

PRESENTER: **Wastewater Superintendent**

PREVIOUS ACTION, IF ANY: **None**

SUMMARY OF ITEM BEING PRESENTED:
The Wastewater Utility is seeing a steady increase in the correlation between precipitation events and increased flows at the treatment facility. Ideally, a rainfall event would not generate any increase in flow at the treatment facility. In order to reduce the impacts of "clear water" flow we need to identify locations, prioritize the issues found and make the necessary repairs. Smoke testing is an economic first step to help identify problematic areas. Based on lift station pumping frequency Fraternity Lane and Vanderlip Lift Station service areas have the greatest issues during wet weather events. Because of this we will be targeting these areas first. All quotes do include the involvement of two Wastewater staff members to help lower cost and increase our knowledge of the process for future work. In addition, a method of education and notification will be developed to inform residents located in these areas about the project and its goals along with a method to contact the City with concerns. The end product of this project will be a report provided to the City along with photos and descriptions of the deficiencies found. Funds for this project will be provided by the Wastewater Utility sewer repair and maintenance fund.

BUDGET IMPACT, IF ANY: **None**

BOARD, COMMISSION, OR COMMITTEE RECOMMENDATION, IF ANY: **None**

STAFF RECOMMENDATION: **Recommend approval of the contract with Strand Associates Inc. for smoke testing of Vanderlip and Fraternity Lift Station service areas in the amount of $12,500.00.**

RECOMMENDED MOTION: **Approval of the staff recommendation noted above.**

ATTACHMENT(S) INCLUDED (If none, please state that)
EPA Sewer System Testing - Section 2.4.2
Bid Summary with 3 competitive bids
Various Utility trends from June/July of 2013

FOR MORE INFORMATION CONTACT:
Tim Reel, treel@whitewater-wi.gov, 262.473.5920.

CITY OF WHITEWATER
INTEROFFICE MEMORANDUM

TO: CAMERON CLAPPER, CITY MANAGER

FROM: TIM REEL, WASTEWATER SUPERINTENDENT

SUBJECT: SANITARY SEWER SMOKE TESTING - BID SUMMARY

DATE: 08/01/2013

CC: CITY COUNCIL

Three quotes were received after site visits from each contractor. The prices received were:

Strand Associates, Inc. 910 West Wingra Drive Madison, WI 53715	$12,500.00
Great Lakes TV Seal Inc. 3600 Kewaunee Road Green Bay, WI 54311	$13,477.26
Visu-Sewer, Inc. W230 N4855 Betker Drive Peawaukee, WI 53072	$15,031.46

The owner or operator should have in place a program for the efficient identification of excessive I/I. The program should look at the wastewater treatment plant, pump stations, permanent meter flows, and rainfall data to characterize peaking factors for the whole system and major drainage basins. The reviewer should evaluate the program including procedures and records associated with the flow monitoring plan. Temporary meters should be used on a "roving" basis to identify areas with high wet weather flows. Areas with high wet weather flows should then be subject to inspection and rehabilitation activities.

2.4.2 Sewer System Testing

Sewer system testing techniques are often used to identify leaks which allow unwanted infiltration into the sewer system and determine the location of illicit connections and other sources of stormwater inflow. Two commonly implemented techniques include smoke testing and dyed water testing. Regardless of the program(s) implemented by the owner or operator, the reviewer should evaluate any procedures and records that have been established for these programs. The reviewer should also evaluate any public relations program and assess how the owner or operator communicates with the public during these tests (i.e., when there is a possibility of smoke entering a home or building).

Smoke testing is a relatively inexpensive and quick method of detecting sources of inflow in sewer systems, such as down spouts, or driveway and yard drains and works best suited for detecting cross connections and point source inflow leaks. Smoke testing is not typically used on a routine basis, but rather when evidence of excessive I/I already exists. With each end of the sewer of interest plugged, smoke is introduced into the test section, usually via a manhole. Sources of inflow can then be identified when smoke escapes through them.

Areas Usually Smoke Tested

- Drainage paths
- Ponding areas
- Roof leaders
- Cellars
- Yard and area drains
- Fountain drains
- Abandoned building sewers
- Faulty service connections

If the collection system owner or operator implements a regular program of smoke testing, the program should include a public notification procedure. The owner or operator should also have procedures to define:

- How line segments are isolated
- The maximum amount of line to be smoked at one time
- The weather conditions in which smoke testing is conducted (i.e., no rain or snow, little wind and daylight only)

The results of positive smoke tests should be documented with carefully labeled photographs. Building inspections are sometimes conducted as part of a smoke testing program and, in some cases, may be the only way to find illegal connections. If properly connected to the sanitary sewer system, smoke should exit the vent stacks of the surrounding properties. If traces of the

smoke or its odor enter the building, it is an indication that gases from the sewer system may also be entering. Building inspections can be labor intensive and require advanced preparation and communication with the public.

Dyed water testing may be used to establish the connection of a fixture or appurtenance to the sewer. It is often used to confirm smoke testing or to test fixtures that did not smoke. As is the case with smoke testing, it is not used on a routine basis but rather in areas that have displayed high wet weather flows. Dyed water testing can be used to identify structurally damaged manholes that might create potential I/I problems. This is accomplished by flooding the area close to the suspected manholes with dyed water and checking for entry of dyed water at the frame-chimney area, cone/corbel, and walls of the manhole.

2.4.3 Sewer System Inspection

Visual inspection of manholes and pipelines are the first line of defense in the identification of existing or potential problem areas. Visual inspections should take place on both a scheduled basis and as part of any preventive or corrective maintenance activity. Visual inspections provide additional information concerning the accuracy of system mapping, the presence and degree of I/I problems, and the physical state-of-repair of the system. By observing the manhole directly and the incoming and outgoing lines with a mirror, it is possible to determine structural condition, the presence of roots, condition of joints, depth of debris in the line, and depth of flow. The reviewer should examine the records of visual inspections to ensure that the following information is recorded:

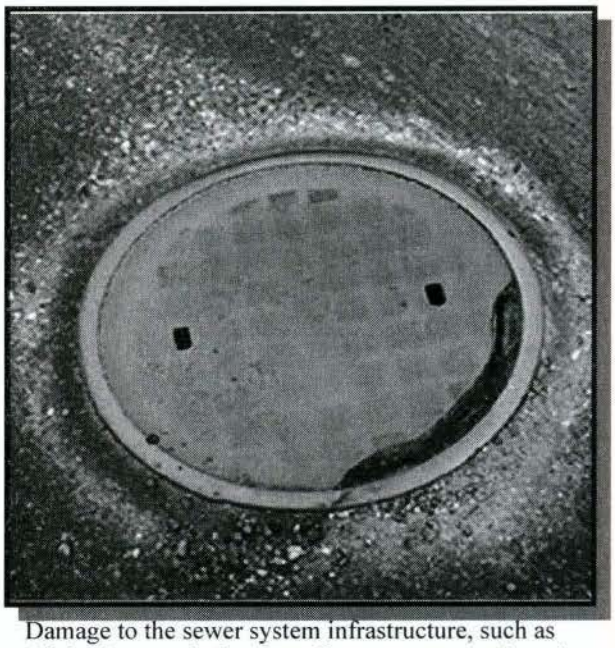

Damage to the sewer system infrastructure, such as this broken manhole cover allows stormwater into the sewer system (photo: Limno-Tech, Inc.)

- Manhole identification number and location
- Cracks or breaks in the manhole or pipe (inspection sheets and/or logs should record details on defects)
- Accumulations of grease, debris, or grit
- Wastewater flow characteristics (e.g., flowing freely or backed up)
- Inflow
- Infiltration (presence of clear water in or flowing through the manhole)
- Presence of corrosion
- Offsets or misalignments
- Condition of the frame
- Evidence of surcharge
- Atmospheric hazard measurements (especially hydrogen sulfide)
- If repair is necessary, a notation as to whether a work order has been issued

City of Whitewater Wastewater Utility

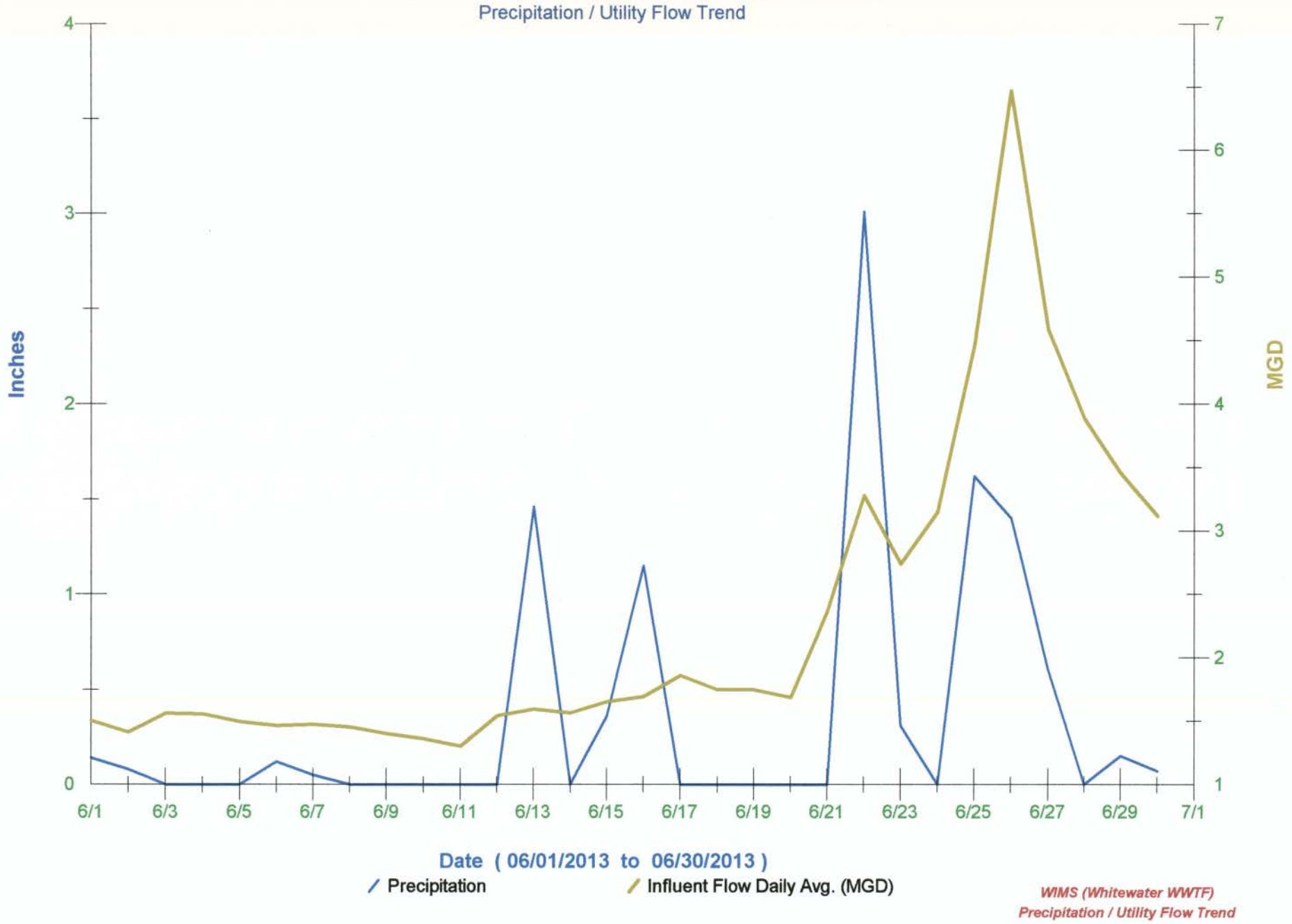

WIMS (Whitewater WWTF)
Precipitation / Utility Flow Trend

City of Whitewater Wastewater Utility

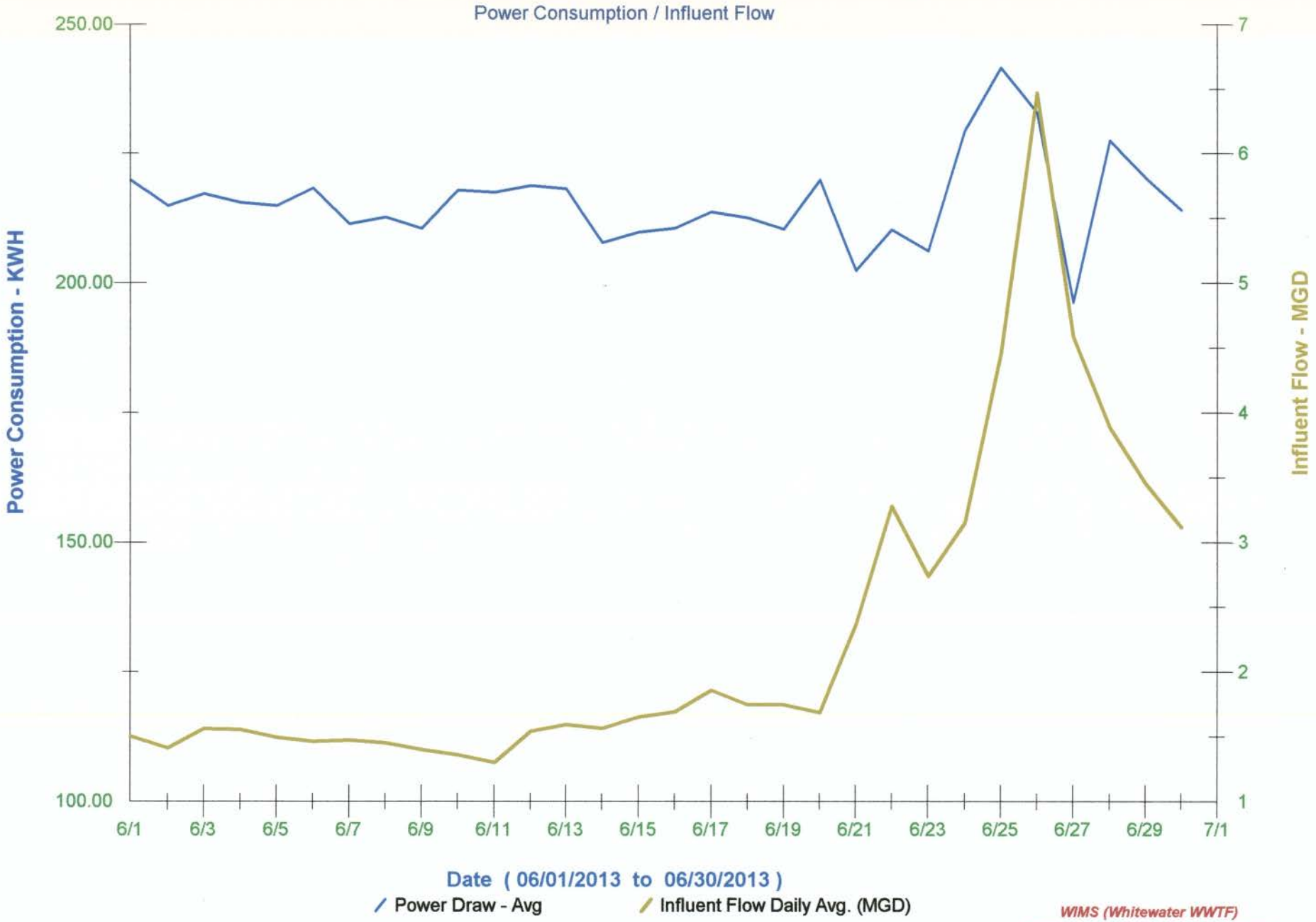

WIMS (Whitewater WWTF)
Power Consumption / Influent Flow

June 26 flow spike - Windows Photo Viewer

File Print E-mail Burn Open

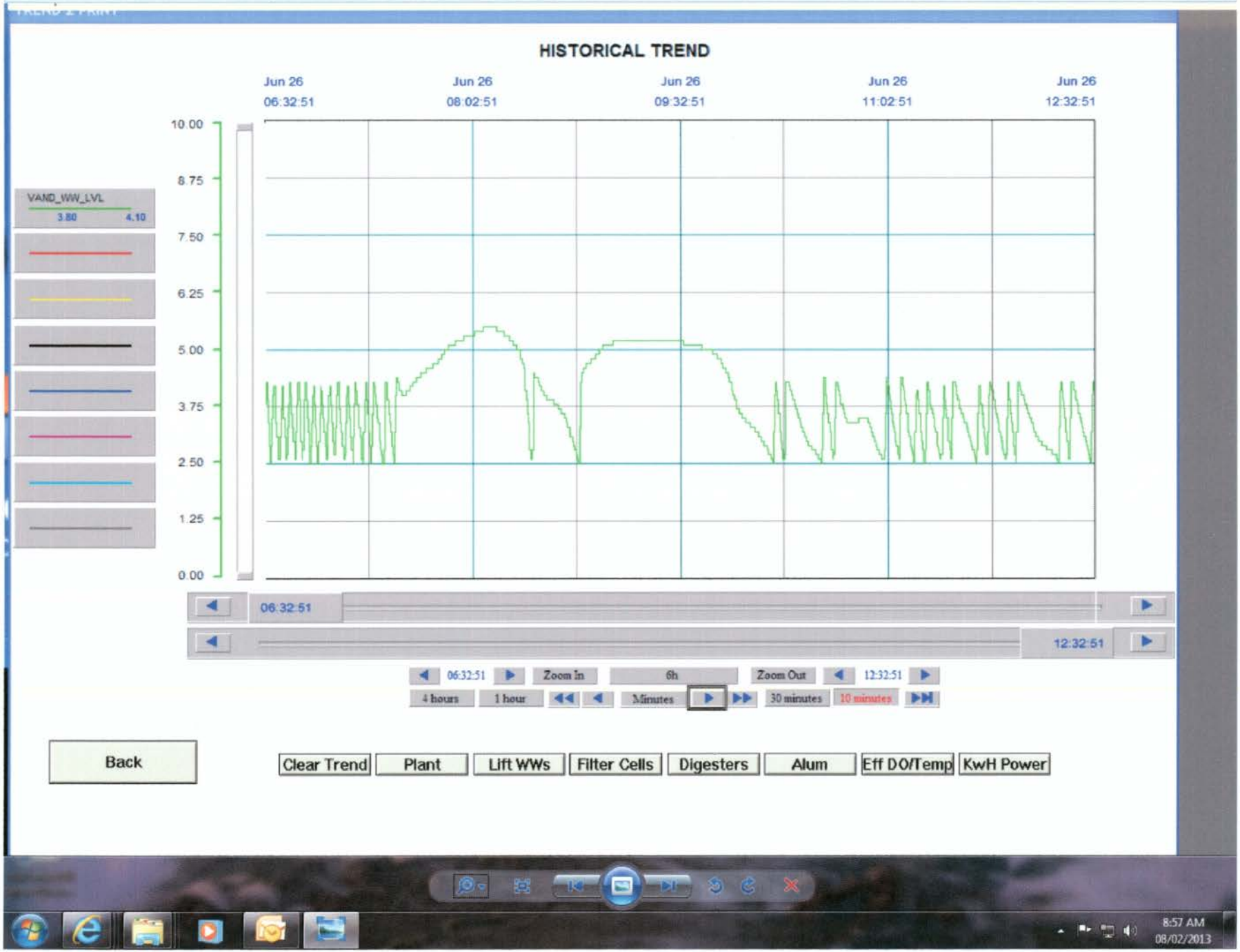

8:57 AM
08/02/2013

C-3

City of Whitewater Council Agenda Item Information Sheet

MEETING DATE: **08/06/2013**

ITEM: **Request for authorization to purchase playground equipment for Turtle Mound Park**

PRESENTER: **Parks & Recreation Director**

PREVIOUS ACTION, IF ANY:
5/21/13 Approval of agreement with UW-Whitewater Community Optimist Club

SUMMARY OF ITEM BEING PRESENTED:
The current playground equipment was installed in 1989 and is in need of replacement. I requested and received four proposals from playground equipment manufacturers. I sent invite letters to the neighborhood to assist in the selection of the equipment. I also solicited input from the Optimist Club who are a vested partner in the project.

BUDGET IMPACT, IF ANY:
The CIP includes $15,000 towards the project that is being matched by a donation from the Optimist Club of $15,000 for a total project budget of $30,000. An anonymous donation was made in the amount of $2,000 to add value to the project.

BOARD, COMMISSION, OR COMMITTEE RECOMMENDATION, IF ANY:
The Parks and Recreation Board reviewed the proposals and approved going with the recommendation of the review committee at its July 29th meeting.

STAFF RECOMMENDATION:
Following the recommendation of the review committee and staff I am asking that the Council accept the proposal of Miller & Associates and authorize purchase of equipment to not exceed $32,000.

RECOMMENDED MOTION:
Authorize purchase of playground equipment from Miller & Associates for the Turtle Mound Park playground.

ATTACHMENT(S) INCLUDED (If none, please state that)
Miller & Associates proposal

FOR MORE INFORMATION CONTACT:
Matt Amundson
262-473-0122
mamundson@whitewater-wi.gov

MILLER & ASSOCIATES - SAUK PRAIRIE, INC.
STREET, SPORTS, PARK & PLAY
Phone 608.643.8105 800.953.8700 www.millersaukprairie.com Fax 608.643.7932

June 27, 2013

C-3

Matt Amundson
City of Whitewater
P.O. Box 178
Whitewater, WI 53190

Re: Turtle Mound Park

Dear Matt,

We are pleased to provide our proposal for playground equipment to be located at Turtle Mound Park. Miller & Associates has been providing play equipment to communities throughout Wisconsin since 1978. This equipment is provided by the BCI Burke Company, the oldest playground company in the United States. Burke has continuously maintained their corporate offices and production facilities in Fond du Lac, WI for over 90 years.

All of the equipment we have proposed meets or exceeds the most current standards established by the U.S. Consumer Products Safety Commission (CPSC), ASTM F1487 Standard Consumer Safety Performance Specification for Playground Equipment for Public Use, and Americans with Disabilities (ADA) Act, Accessibility Guidelines.

When you purchase your play equipment from Miller & Associates you will be receiving play equipment of the highest quality and contributing to Wisconsin's economy. Hundreds of Wisconsin employees will have contributed to delivering this exciting new play equipment to you. In addition to the employees working in Fond du Lac at Burke, all of the rotationally molded plastic is manufactured in Oostburg, WI, and our transportation services are provided by N&M Transfer of Neenah, WI.

Not all play equipment is the same. The initial purchase cost of your play equipment may not represent the **Total Cost of Ownership** for your playground project. Compare the other manufacturer's specifications, and we believe that you will see why your **Total Cost of Ownership** will be less when you select BCI Burke and Miller & Associates as your playground vendor. Here are just a few of the reasons:

- Burke's KoreKonnect® direct bolt clamp system results in a stronger (2-point) clamp to post connection when compared to other manufacturers.
- 100% non-prorated product warranty.
- All warranty parts will have a completely new warranty, not just the remainder of any initial warranty.
- All of our plastic components are Compound Plastics with UV-15 protection. These Compound Plastics provide bright vibrant colors for substantially more years than dry blended compounds. Many of the other playground manufacturers use Dry Blend plastics that are less expensive to produce and will fade in only a few years.

Our supervised/assisted service will allow you to install the equipment with volunteers and city staff.

- The supervisor will be working with your volunteers to insure that the structure is installed per BCI Burke's specifications. He will not actually be installing the equipment.
- It is your responsibility to have a group of qualified individuals that will be completing the work. It is important that these volunteers commit to working throughout the installation process and not just for a few hours.
- The following is an outline of the scope of services provided with a supervised / assisted installation as well as areas that you, the owner, will be responsible for. We will provide a detailed list of items you should have on site the day of your installation before the install date.

Supervised Installation Includes:	**Owner Must Supply / Provide:**
One supervisor for up to 8 hours of assistance per day	Receive and storage of play equipment
Layout for digging of all required holes	Labor to complete installation of equipment
Assisting with identification of play components	Patio bricks for all footings required
Assisting with interpreting installation plans	Basic tools for assembly
	Necessary concrete
	Site work prior to assembly of equipment
	Resilient surfacing materials

We would look forward to working with you on this playground project. Please feel free to contact me with any questions that you may have or to schedule an appointment to review our proposal in greater detail.

Sincerely,

Steve Barritt
President

cc: Ty Calkins, Sales Representative

C-3

References

Jake Anderson
City of Monona
1011 Nichols Road
Monona, WI 53716
janderson@ci.monona.wi.us
608-222-4167

Tim McGuire
City of Appleton
1819 Witzke Blvd.
Appleton, WI 54911
tim.mcguire@appleton.org
920-832-3920

Mark Schroeder
City of New Berlin
3805 S. Casper Drive
New Berlin, WI 53151
mschroeder@newberlin.org
262-797-2443

Robert Rafel
City of Racine
800 Center St. Rm. 127
Racine, WI 53403
robert.rafel@cityofracine.org
262-636-9135

MILLER & ASSOCIATES - SAUK PRAIRIE, INC.
STREET, SPORTS, PARK & PLAY
Phone 608.643.8105 800.953.8700 www.millersaukprairie.com Fax 608.643.7932

C-3

QUOTATION

Date: **June 25, 2013**

To: **City of Whitewater**
Attn: **Matt Amundson**

Project: **Turtle Mound Park**

QTY.	MODEL/DESCRIPTION	AMOUNT
-1-	BCI Burke Nucleus Play Equipment Design #30-75784-1	$ 20,624.00
-1-	Single Post Swing Unit with 2 Belt Seats, 1 Infant Seat, 1 Adaptive Seat Note: This swing unit has the requested type of swing seats but is a different type of frame from the requested specifications to accommodate the accessible swing unit.	$ 2,995.00
	Freight for All Above	$ 450.00
	2 Days Supervised Installation (1 man, 2 days, max 8 hrs/day)	$ 1,000.00
-200 cu yds-	Best Wood Mat, Delivered Note: Best Wood Mat does not test for tramp metals. All engineered wood fiber is produced from virgin lumber.	$ 4,700.00
	Total for All Above	$ 29,769.00

Terms: Net 15 From Invoice Date
Est. Ship: 4-6 Weeks ARO
FOB: Whitewater, WI
Quote Valid: 30 days

******NOTE******

- Installation of the materials is the responsibility of the purchaser, except as noted above.
- Materials will be shipped via common carrier. The purchaser is responsible for receiving (off loading) and storage of all materials. This may require the use of a fork lift, skid steer with forks, or several men to break down the freight and off load the freight by "hand".
- Any damages or shortages must be noted on the bill of lading at the time of receiving the materials.

Steve Barritt
President

cc: Ty Calkins, Sales Representative

MILLER
&ASSOCIATES-SAUK PRAIRIE INC
STREET SPORTS PARK & PLAY
Phone 608.643.8105 800.953.8700 www.millersaukprairie.com Fax 608.643.7932

C-3

Turtle Mound Park

Design #30-75784-1

MILLER
&ASSOCIATES-SAUK PRAIRIE, INC.
STREET, SPORTS, PARK & PLAY
1-800-953-8700
Proposal 30-75784-1
Burke
Turtle Mound Park

C-3

MILLER
&ASSOCIATES-SAUK PRAIRIE, INC.
STREET SPORTS PARK & PLAY
1-800-953-8700
Proposal 30-75784-1
Burke
Turtle Mound Park

C-3

TURTLE MOUND PARK
30-75784-1

C-3

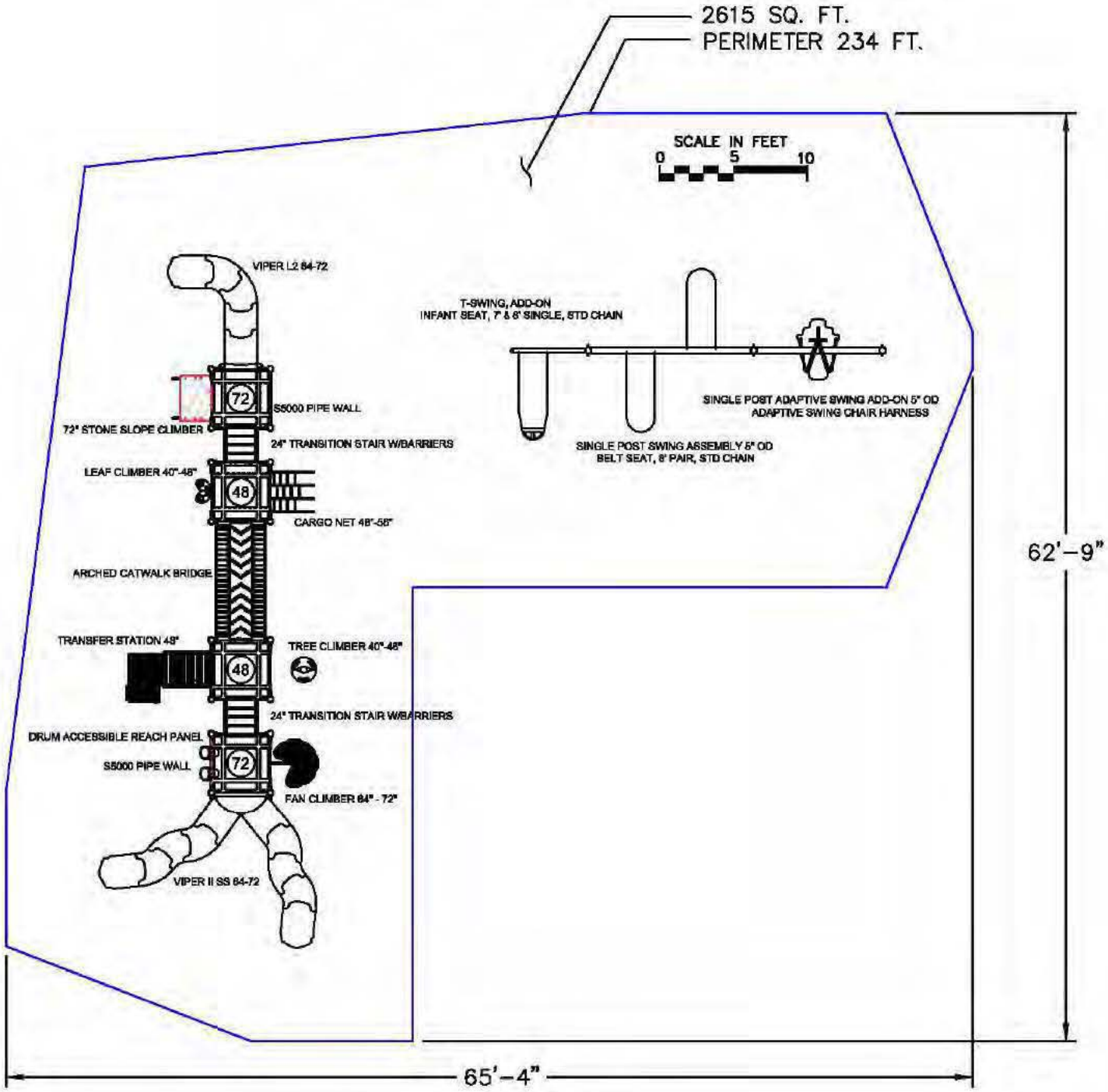

Turtle Mound Park

Proposal # 30-75784-1
June 19, 2013

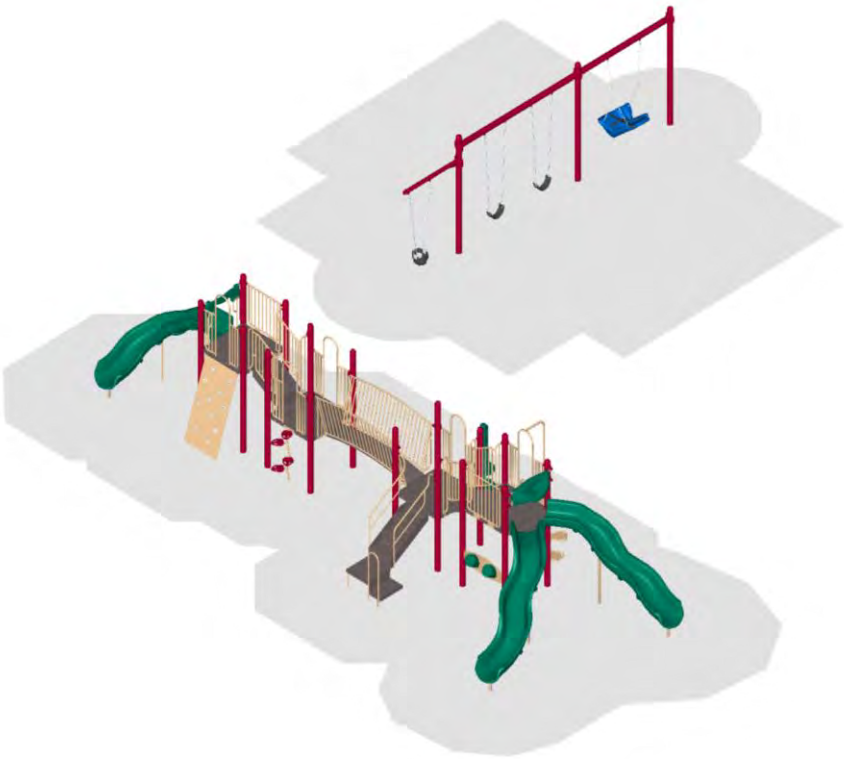

Presented by

Miller & Associates – Sauk Prairie, Inc.

and

Burke
premier play environments

Design Summary

Miller & Associates is pleased to present this Proposal for consideration for the Turtle Mound Park located in Whitewater. BCI Burke Company, LLC has been providing recreational playground equipment for over 90 years and has developed the right mix of world-class capabilities to meet your initial and continuing needs. We believe our proposal will meet or exceed your project's requirements and will deliver the greatest value to you.

The following is a summary of some of the key elements of our Proposal:

- Project Name: Turtle Mound Park
- Project Number: 30-75784-1
- User Capacity: 69
- Age Groups: Ages 2-5 years, 5-12 years
- Dimensions: 62' 8" x 65' 4"
- Designer Name: Mat Kane

Miller & Associates has developed a custom playground configuration based on the requirements as they have been presented for the Turtle Mound Park playground project. Our custom design will provide a safe and affordable playground environment that is aesthetically pleasing, full of fun for all users and uniquely satisfies your specific requirements. In addition, proposal # 30-75784-1 has been designed with a focus on safety, and is fully compliant with ASTM F1487 and CPSC playground safety standards.

We invite you to review this proposal for the Turtle Mound Park playground project and to contact us with any questions that you may have.

Thank you in advance for giving us the opportunity to make this project a success.

C-3

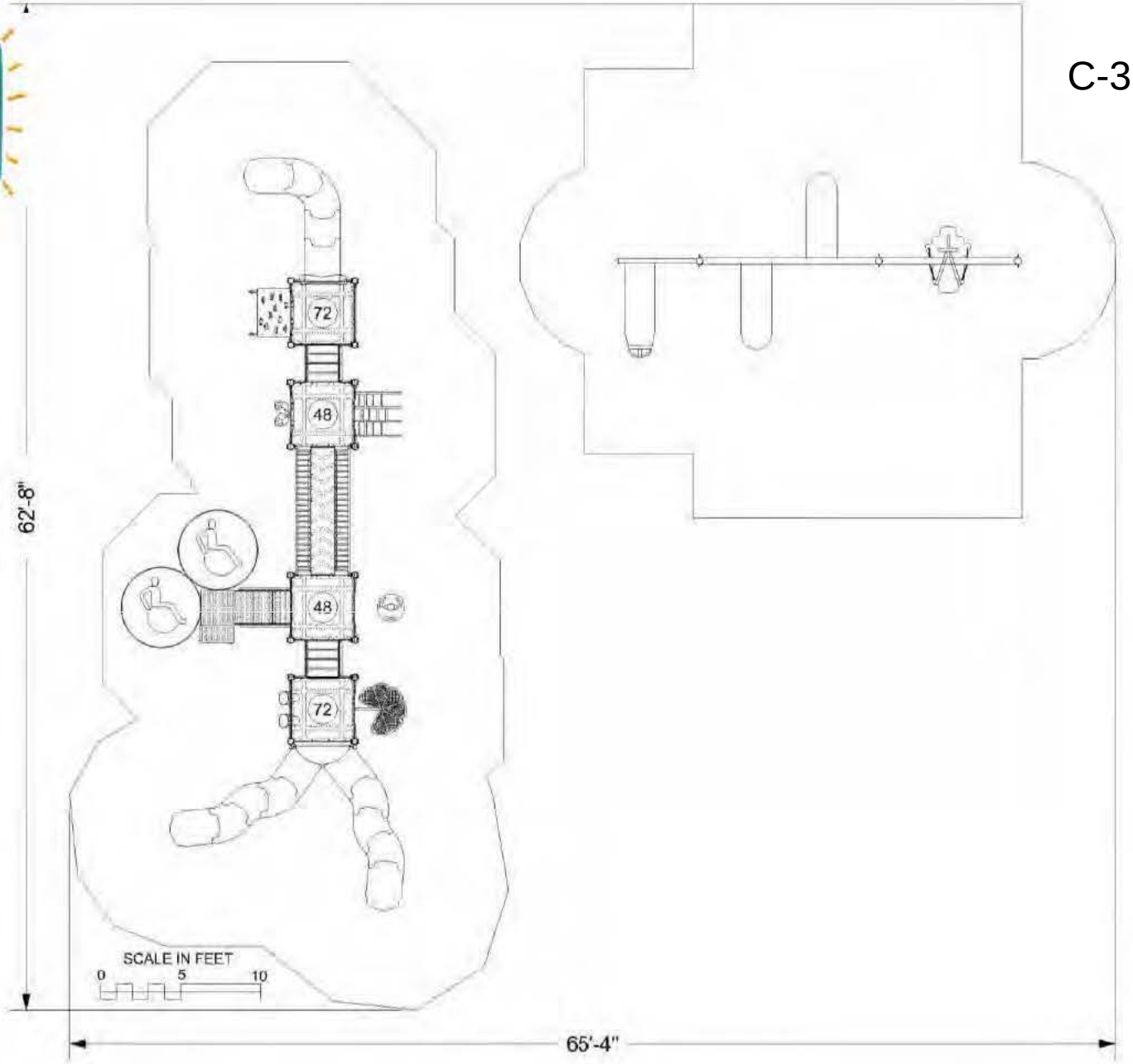

INFORMATION
MINIMUM FALL ZONE SURFACED WITH RESILIENT MATERIAL AREA

2135 SQ.FT.

PERIMETER

291 FT.

STRUCTURE SIZE

62' 8" x 65' 4"

STRUCTURE IS DESIGNED FOR CHILDREN AGES:

- ☐ 6-23 MONTH OLDS
- X 2-5 YEAR OLDS
- X 5-12 YEAR OLDS
- ☐ 13 + YEAR OLDS

The play components identified in this plan are IPEMA certified. The use and layout of these components conform to the requirements of ASTM F1487. To verify product certification, visit www.ipema.org

The space requirements shown here are to ASTM standards. Requirements for other standards may be different.

The use and layout of play components identified in this plan conform to the CPSC guidelines.

ADA ACCESSIBILITY GUIDELINE (ADAAG CONFORMANCE)

NUMBER OF PLAY EVENTS	13	
NUMBER OF ELEVATED PLAY EVENTS	7	
NUMBER OF ELEVATED PLAY EVENTS ACCESSIBLE BY RAMP	PROVIDED: 0	REQ'D: 0
NUMBER OF ELEVATED PLAY EVENTS ACCESSIBLE BY TRANSFER SYSTEM	PROVIDED: 7	
NUMBER OF ELEVATED PLAY EVENTS ACCESSIBLE BY RAMP OR TRANSFER SYSTEM		REQ'D: 4
NUMBER OF GROUND LEVEL PLAY EVENTS	PROVIDED: 6	REQ'D: 2
NUMBER OF TYPES OF GROUND LEVEL PLAY EVENTS	PROVIDED: 3	REQ'D: 2

WARNING!

ACCESSIBLE SAFETY SURFACING MATERIAL IS REQUIRED BENEATH AND AROUND THIS EQUIPMENT.

FOR SLIDE FALL ZONE SURFACING AREA SEE CPSC's Handbook for Public Playground Safety.

PLATFORM HEIGHTS ARE IN INCHES ABOVE RESILIENT MATERIAL.

SERIES: Basics, Nucleus
SITE PLAN
DRAWN BY: Mat Kane

Turtle Mound Park
1602 W Turtle Mound Circle
Whitewater, WI 53190

Miller & Associates
30-75784-1

June 19, 2013

BCI Burke Company, LLC PO Box 549 Fond du Lac, Wisconsin 54936-0549 Telephone 920-921-9220

C-3

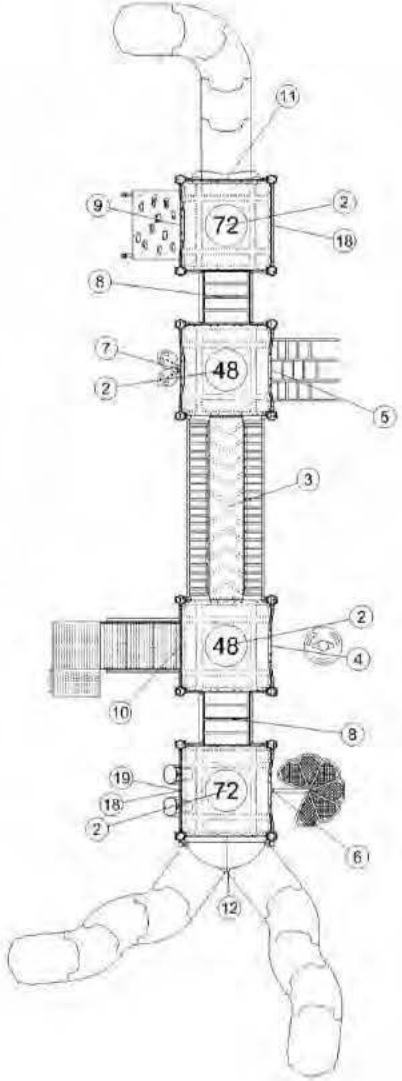

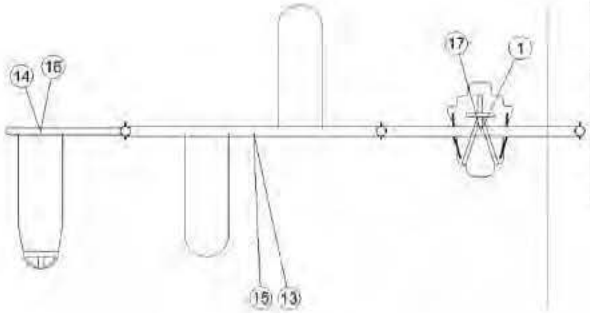

ITEM	COMP	DESCRIPTION
1	046-1383	ADAPTIVE SWING SEAT HARNES
2	270-0130	SQUARE PLATFORM
3	270-0219	ARCHED CATWALK BRIDGE 96"
4	370-0172	TREE CLIMBER 40"-48"
5	370-0230	CARGO NET 48"-56"
6	370-0380	FAN CLIMBER 64" - 72"
7	370-0422	LEAF CLIMBER 40" - 48"
8	370-0467	24" TRANSITION STAIR W/BARRI
9	370-0498	STONE SLOPE CLIMBER 72"
10	370-0720	TRANSFER STATION, HANDRAIL
11	470-0549	VIPER L2 64-72
12	470-0571	VIPER II SS 64-72
13	550-0093	SINGLE POST SWING ASSEMBL
14	550-0099	INFANT SEAT, 7' & 8' SINGLE, ST
15	550-0112	BELT SEAT, 8' PAIR, STD CHAIN
16	550-0140	T-SWING, ADD-ON
17	550-0143	SINGLE POST ADAPTIVE SWING
18	570-0394	PIPE WALL
19	570-2617	DRUM ACCESSIBLE REACH PAN

SERIES: Basics, Nucleus
COMPONENT PLAN
DRAWN BY: Mat Kane

Turtle Mound Park
1602 W Turtle Mound Circle
Whitewater, WI 53190

Miller & Associates
30-75784-1

June 19, 2013

BCI Burke Company, LLC PO Box 549 Fond du Lac, Wisconsin 54936-0549 Telephone 920-921-9220

C-3

Proposal Prepared for:

Project Location:
Turtle Mound Park
1602 W Turtle Mound Circle
Whitewater, WI 53190

Proposal Prepared by:
Miller & Associates
P.O. Box 154
Prairie du Sac, WI 53578
Phone: 608-643-8105
Fax: 608-643-7932
contact@millersaukprairie.com

Ty Calkins
Phone: 608-743-4243
Fax: 608-743-4243
tyc@millersaukprairie.com

Component No.	Description	Qty.	User Cap.	Ext. User Cap.	Weight	Ext. Weight
Burke Basics						
046-1383	ADAPTIVE SWING SEAT HARNESS	1	0	0	2	2
550-0093	SINGLE POST SWING ASSEMBLY 5"...	1	2	2	220	220
550-0099	INFANT SEAT, 7' & 8' SINGLE, ...	1	0	0	12	12
550-0112	BELT SEAT, 8' PAIR, STD CHAIN	1	0	0	20	20
550-0140	T-SWING, ADD-ON	1	1	1	39	39
550-0143	SINGLE POST ADAPTIVE SWING BA...	1	1	1	182	182
Nucleus						
270-0130	SQUARE PLATFORM	4	6	24	106	424
270-0219	ARCHED CATWALK BRIDGE 96"	1	6	6	368	368
370-0172	TREE CLIMBER 40"-48"	1	3	3	118	118
370-0230	CARGO NET 48"-56"	1	2	2	62	62
370-0380	FAN CLIMBER 64" - 72"	1	4	4	113	113
370-0422	LEAF CLIMBER 40" - 48"	1	4	4	77	77
370-0467	24" TRANSITION STAIR W/BARRIE...	2	2	4	164	328
370-0498	STONE SLOPE CLIMBER 72"	1	2	2	145	145
370-0720	TRANSFER STATION, HANDRAIL 48"	1	6	6	236	236
470-0549	VIPER L2 64-72	1	2	2	182	182
470-0571	VIPER II SS 64-72	1	4	4	360	360
570-0394	PIPE WALL	2	0	0	36	72
570-2617	DRUM ACCESSIBLE REACH PANEL	1	4	4	26	26
600-0104	NPPS SUPERVISION SAFETY KIT	1	0	0	3	3
670-0098	MODULAR HARDWARE, NUCLEUS	1	0	0	5	5
670-0099	INSTALLATION KIT, INTENSITY	1	0	0	2	2
670-0103	MAINTENANCE KIT, INTENSITY	1	0	0	0	0
670-0166	POST ASSEMBLY 5" OD X 139"	8	0	0	74	592
670-0167	POST ASSEMBLY 5" OD X 147"	8	0	0	78	624

Total User Capacity: 69
Total Weight: 4,212 lbs.

BCI Burke Generations Warranty™

The Longest and Strongest warranty in the industry

C-3

BCI Burke Company, LLC ("Burke") warrants that all standard products are warranted to be free from defects in materials and workmanship, under normal use and service, for a period of one (1) year from the date of invoice.

We stand behind our products.

In addition, the following products are warranted, under normal use and service from the date of invoice as follows:

- One Hundred (100) Year Limited Warranty on aluminum and steel upright posts (including Intensity®, Voltage™, Nucleus™ and Little Buddies®) against structural failure due to corrosion, deterioration or workmanship.
- One Hundred (100) Year Limited Warranty on KoreKonnect® clamps against structural failure due to corrosion, deterioration or workmanship.
- One Hundred (100) Year Limited Warranty on Hardware (nuts, bolts, washers)
- One Hundred (100) Year Limited Warranty on bolt-through fastening and clamp systems (Voltage™, Intensity® and Nucleus™).
- Twenty-Five (25) Year Limited Warranty on spring assemblies and aluminum cast animals.
- Fifteen (15) Year Limited Warranty on main structure platforms and decks, metal roofs, table tops, bench tops, railings, loops and rungs.
- Fifteen (15) Year Limited Warranty on all plastic components including StoneBorders against structural failure due to materials or workmanship.
- Ten (10) Year Limited Warranty on ShadePlay Canopies fabric, threads, and cables against degradation, cracking or material breakdown resulting from ultra-violet exposure, natural deterioration or manufacturing defects. This warranty is limited to the design loads as stated in the specifications.
- Ten (10) Year Limited Warranty on NaturePlay® Boulders and GFRC products against structural failure due to natural deterioration or workmanship. Natural wear, which may occur with any concrete product with age, is excluded from this warranty
- Ten (10) Year Limited Warranty on Full Color Custom Signage against manufacturing defects that cause delamination or degradation of the sign. Full Color Custom Signs also carry a two (2) year warranty against premature fading of the print and graphics on the signs.
- Five (5) Year Limited Warranty on Intensity® cables against premature wear due to natural deterioration or manufacturing defects.
- Five (5) Year Limited Warranty on swing seats and hangers; Kid Koaster® Trolleys and other moving parts against structural failure due to materials or workmanship.
- Three (3) Year Limited Warranty on electronic panel speakers, sound chips and circuit boards against electronic failure caused by manufacturing defects.

The warranty stated above is valid only if the equipment is erected in conformity with the layout plan and/or installation instructions furnished by BCI Burke Company, LLC using approved parts; have been maintained and inspected in accordance with BCI Burke Company, LLC instructions. Burke's liability and your exclusive remedy hereunder will be limited to repair or replacement of those parts found in Burke's reasonable judgment to be defective. Any claim made within the above stated warranty periods must be made promptly after discovery of the defect. A part is covered only for the original warranty period of the applicable part. Replacement parts carry the applicable warranty from the date of shipment of the replacement from Burke. After the expiration of the warranty period, you must pay for all parts, transportation and service charges.

Burke reserves the right to accept or reject any claim in whole or in part. Burke will not accept the return of any product without its prior written approval. Burke will assume transportation charges for shipment of the returned product if it is returned in strict compliance with Burke's written instructions.

THE FOREGOING WARRANTIES ARE EXCLUSIVE AND IN LIEU OF ANY OTHER WARRANTY, EXPRESS OR IMPLIED, INCLUDING BUT NOT LIMITED TO ANY IMPLIED WARRANTY OR MERCHANTABILITY OR FITNESS FOR A PARTICULAR PURPOSE. IF THE FOREGOING DISCLAIMER OF ADDITIONAL WARRANTIES IS NOT GIVEN FULL FORCE AND EFFECT, ANY RESULTING ADDITIONAL WARRANTY SHALL BE LIMITED IN DURATION TO THE EXPRESS WARRANTIES AND BE OTHERWISE SUBJECT TO AND LIMITED BY THE TERMS OF BURKE'S PRODUCT WARRANTY. SOME STATES DO NOT ALLOW THE EXCLUSION OF CERTAIN IMPLIED WARRANTIES, SO THE ABOVE LIMITATION MAY NOT APPLY TO YOU.

Warranty Exclusions: The above stated warranties do not cover: "cosmetic" defects, such as scratches, dents, marring, or fading; damage due to incorrect installation, vandalism, misuse, accident, wear and tear from normal use, exposure to extreme weather; immersion in salt or chlorine water, unauthorized repair or modification, abnormal use, lack of maintenance, or other cause not within Burke's control; and

Limitation of Remedies: Burke is not liable for consequential or incidental damages, including but not limited to labor costs or lost profits resulting from the use of or inability to use the products or from the products being incorporated in or becoming a component of any other product. If, after a reasonable number of repeated efforts, Burke is unable to repair or replace a defective or nonconforming product, Burke shall have the option to accept return of the product, or part thereof, if such does not substantially impair its value, and return the purchase price as the buyer's entire and exclusive remedy. Without limiting the generality of the foregoing, Burke will not be responsible for labor costs involved in the removal of products or the installation of replacement products. Some states do not allow the exclusion of incidental damages, so the above exclusion may not apply to you.

Terms of Sale

Pricing: Prices published in this catalog are in USD, are approximate and do not include shipping & handling, surfacing, installation nor applicable taxes. All prices are subject to change without notice. Contact your Burke representative for current pricing. Payments are to be made in USD.

Weights: Weights are approximate and may vary with actual orders.

Installation: All equipment is shipped unassembled. For a list of factory-certified installers in your area, please contact your Burke representative.

Specifications: Product specifications in this catalog were correct at the time of publication. However, product improvements are ongoing at Burke, and we reserve the right to change or discontinue specifications without notice.

Loss or Damage in Transit: A signed bill of lading is our receipt from a carrier that our shipment to you was complete and in good condition upon arrival. Before you sign, please check the Bill of Lading carefully when the shipment arrives to make sure nothing is missing and there are no damages. Once the shipment leaves our plant, we are no longer responsible for any damage, loss or shortage.

Trademark(s) are the property of BCI Burke Company, LLC. © BCI Burke Company, LLC 2013. All Rights Reserved.

Going Green With Burke

BCI Burke: Committed to a Sustainable World

C-3

As we create new playgrounds for kids, we like to think we're helping get our children ready for the future. But it's also important to create a future that's ready for the kids. In other words, we have a critical role in ensuring that the world remains a safe and hospitable environment for generations to come.

That's why BCI Burke is committed to a wide range of initiatives to reduce our carbon footprint, save energy, recycle materials and continually reduce the environmental impact of our manufacturing processes. Current initiatives include the following:

ISO 14001:2004 Certified: It's one thing to say you're committed to environmentally sustainable operations. It's another to actually build strict environmental controls into your manufacturing processes. That's just what we at BCI Burke have done, and it earned the ISO 14001:2004 certification.

PVC: All of our PVC is free of hazardous heavy metals such as lead. In addition, we have reduced the levels of phthalate plasticizers. Our PVC products comply fully with the industry-leading California standards.

Use of Recycled Materials: We carefully determine the material composition of our products to balance our responsibilities to a sustainable environment with our commitment to provide high-quality, safe, durable equipment. A typical Burke playground structure and its components has an average recycled content of approximately 35%. This is determined by reviewing the materials in the components.

In our packaging, we encourage the use of materials containing recycled content. Our commitment to the use of recycled materials carries over into marketing materials we publish. With an estimated 56 tons of catalogs being printed and distributed each year, it is critical to use recycled products. We have implemented standards requiring that our catalogs be printed using processes and products meeting the standards of the Forest Stewardship Council (FSC).

Recycling: BCI Burke on average recycles 33 tons of HDPE (high-density polyethylene) and 65 tons of metal.

Energy: BCI Burke has invested in energy efficient lighting that has reduced our total energy consumption by 16%. We are constantly assessing our energy use in our offices, manufacturing plant and transportation methods. With the Alliant Energy Second Nature™ Program, we are able to support further development of clean energy. We purchase 20% of our energy from wind and other renewable sources through this program. To green-up the additional 80% of our electricity usage, we've partnered with Greenlight Energy, which means **100% of our electricity comes from wind and other renewable sources**.

U.S. Environmental Protection Agency Green Power: We've also partnered with the EPA's Green Power program. Through this partnership, we meet specific goals for green energy use and report to the EPA on our usage each year. The program ties in with our focus to use and support the development of renewable energy.

Second Nature. A Product of Alliant Energy

NSF Registered to ISO 14001

EPA GREEN POWER PARTNER

800.266.1250 | www.bciburke.com | 02/2013

Trademark(s) are the property of BCI Burke Company, LLC. © BCI Burke Company, LLC 2013. All Rights Reserved.

Commitment to the Environment

Estimated Average Recycled Content Used

Type of Material	Found in These Products	Pre-Consumer	Post-Consumer
Aluminum Posts & Extrusions	Structure Posts, Koaster Rails	75%	30%
Aluminum Castings	Post Caps, Clamps, Brackets	50%	30%
Cardboard	Shipping Containers	25%	35%
Packaging & Wrapping Scrim	Shipping Materials	30%	20%
Recycled Plastic Boards	Recycled Roofs, Benches	90%	95%
Rotomold Plastics	Slides, Panels, Roofs	0%	0%
Rotomold Plastics	StoneBorders	75%	100%
Stainless Steel	Brackets, Slides	40%	40%
Steel Sheet	Platforms, Steps, Brackets	30%	30%
Steel Tube	Posts, Climbers, Supports	50%	0%

BCI Burke actively maintains an environmental management system in compliance with the requirements of ISO 14001:2004 and adheres to the federal requirements of the EPA. All of the materials listed above constitute recyclable product, in areas where such recycling facilities exist. BCI Burke is committed to providing innovative and superior quality park, playground and recreation equipment to our customers by using materials and processes that minimize the creation of wastes and pollution. We will consistently examine our process and products to ensure the continual improvement of our Quality and Environmental Management Programs.

Registered to ISO 14001

Recycled Plastic StoneBorders

Recycled Plastic Roofs and Platforms

Recycled Plastic Site Amenities

Trademark(s) are the property of BCI Burke Company, LLC. © BCI Burke Company, LLC 2013. All Rights Reserved.

Total Cost of Ownership Package™

C-3

Our Most Important "Package"

One of the most important "packages" included in every playground we ship is one you can't even see. We call it our Total Cost of Ownership Package, and it's your assurance that no playground offers a lower true cost than a playground from BCI Burke. So what exactly is in this package?

Lower Maintenance Costs: Exceptional Burke Built™ quality materials and superior manufacturing equal lower lifetime maintenance costs for you.

Non-Prorated Generations Warranty™: If a part has to be replaced, due to material defect or workmanship, it won't cost you a dime.

Added Value: We provide many valuable FREE resources with our playgrounds including an NPPS Playground Supervision Safety Kit, Customized Maintenance Kit and Intensity® Curriculum.

Playground Supplier Comparison

We encourage you to compare Burke against other playground suppliers and see the difference for yourself. Please use the following checklist to help you get started in your playground supplier search and see how Burke offers the lowest Total Cost of Ownership Package!

Supplier:

Burke	A	B	C	
				Safety/Risk Management
❑	❑	❑	❑	Meets or Exceeds All CPSC and ASTM Guidelines
❑	❑	❑	❑	ADAAG Accessibility
❑	❑	❑	❑	All Products are IPEMA Certified Through 3rd Party Testing Program
❑	❑	❑	❑	Founding Member of IPEMA
❑	❑	❑	❑	NPSI Certification of Factory Designers and Engineers
❑	❑	❑	❑	FREE NPPS Playground Supervision Safety Kit
❑	❑	❑	❑	Playground Safety Program for Children Available
❑	❑	❑	❑	FREE Safety Surfacing Guidebook and Customized Maintenance Kit
				Warranty/Quality
❑	❑	❑	❑	Non-Prorated Warranty
❑	❑	❑	❑	FREE Replacement Parts Covered Under Warranty*
❑	❑	❑	❑	ISO 9001:2008 Certified Company
❑	❑	❑	❑	Provides Total Cost of Ownership Package
❑	❑	❑	❑	Compounded Plastics with UV-15
❑	❑	❑	❑	Made in the USA
				Product
❑	❑	❑	❑	Durable
❑	❑	❑	❑	Affordable Quality
❑	❑	❑	❑	Unique and Innovative Design that Maximizes Play Value
❑	❑	❑	❑	Family Owned Business Since 1920
				Service
❑	❑	❑	❑	FREE Design and Consultation Services Including Site and Needs Assessment
❑	❑	❑	❑	Professional, Courteous Representatives that are Responsible Before, During and After the Sale
❑	❑	❑	❑	Provides Information on How to Receive Your Playground
❑	❑	❑	❑	Provides Factory Accredited Playground Installers
❑	❑	❑	❑	Documented Results of Providing Complete, Correct and On-Time Shipments.
				Commitment to the Environment
❑	❑	❑	❑	ISO 14001:2004 Certified Company
❑	❑	❑	❑	Use of Renewable Energy
❑	❑	❑	❑	EPA Green Power Partner

**There is no charge for the warranted parts or shipping. Customer is responsible for any installation costs unless local Burke representative provides supplemental warranty.*

Trademark(s) are the property of BCI Burke Company, LLC. © BCI Burke Company, LLC 2012. All Rights Reserved.

Burke Built™

Made with Pride in the United States

Others may be content to outsource their manufacturing, but we believe the best way to ensure the highest quality is to build our playgrounds here in the heartland, using American engineering, craftsmanship and materials.

Better Connections

Nucleus™ (shown) and Voltage™ features our KoreKonnect® direct-bolt clamp system, which is more accurate and stronger than ever. Best of all, your connections are covered for 100 years under our non-prorated Generations Warranty™.

Materials You Can Trust

We think your kids deserve the best materials available. That's why we use compound rotomolded plastics that resist fading, premium powder coatings, and decks made of steel that can support more than 2 tons.

Compound Plastics with UV-15

You'll get long wear and bright, vibrant colors that hold up for years thanks to our rotomolded plastics with UV-15 protection. That's why we can cover them for 15 years under Burke's Generations Warranty™.

Correct, On-Time Shipments

96.7% On-Time*

95.1% Error-Free*

*% based on orders from 2010, 2011 & 2012
Note: An entire order is considered incorrect even if one bolt is missing.

Turn Key Service

Your Burke representative will take care of anything from full installation to support for your own crew. And when you need service, you'll get a real person who'll already know your system and get your problem fixed in days, not weeks.

Playground Surfaces

Every playground must have a suitable surface that looks great and cushions the inevitable falls. Your Burke representative can help you select the perfect surface including Burke Turf™ artificial turf and Burke Tiles™ interlocking rubber tiles.

1.800.266.1250

www.bciburke.com

C-3

Burke Built Quality

It's been said that quality is a journey, not a destination. At BCI Burke, we've been on that journey for decades, and today's playgrounds are the best we've ever made. Here are a few of the elements that make Burke Built playgrounds a great value. But we think the real difference is in what you don't see – rust, fading colors, and failing parts.

- Made with Pride in the USA
- Better Connections
- Materials You Can Trust
- Compound Plastics with UV-15
- Correct, On-Time Shipments
- Turn Key Service
- Playground Surfaces
- Total Cost of Ownership Package™
- Overachieving Customer Service
- Design Capabilities
- Generations Warranty™

For more information visit **www.bciburke.com** or contact your Burke representative at **800.266.1250**.

Burke understands that playgrounds are big investments, both in terms of time and money, and that's why we are continuously looking for ways to improve our playground equipment and our operations.

Trademark(s) are property of BCI Burke Company, LLC. © BCI Burke Company, LLC 2013. All Rights Reserved.

01/13

BCI Burke Company, LLC
P.O. Box 549
Fond du Lac, WI 54936-0549
800-266-1250
www.bciburke.com

PO Box 154 Prairie du Sac, WI 53578
(800) 953-8700 | (608) 643-8105
Fax: (608) 643-7932
www.millersaukprairie.com

Reinvent Your Playground with Color!

Visit www.bciburke.com/colorselection to customize your playground colors.

C-3

Plastic Components and Roofs

Red, Tan, Blue, Green, Yellow, Granite, Red Granite*, Blue Granite*

Upright Posts, Steel Accessories and Roofs

Green, Purple, Blue, Red, Gold, Yellow, Black, Burgundy, Brown, Tan, Silver, White

Vinyl Components

Red, Tan, Blue, Green, Brown, Black

Panel Components

Red, Tan, Blue, Yellow, Green, Black, Gray

Red White Red, Tan Green Tan, Blue Yellow Blue, Blue White Blue, Green Tan Green, Yellow Red Yellow, Yellow Blue Yellow, Gray Black Gray

Shade Components

Red, Tan, Blue, Yellow, Green

Platform Components

Natural Brown, Blue

RockIt Components

Sandstone, Granite

Contact your local Burke representative for custom paint color options!

Coastal Package Powder Coat System

BCI Burke offers a "Coastal Package" powder coat system. This special powder coat system for metal components and upright posts will provide added corrosion and chemical protection along with added longevity to the color and gloss retention of the powder coated parts. Contact your Burke representative for more information on colors, price and warranty.

**Red Granite and Blue Granite are only available for the Swift Glider, Strength Stepper, Dynamic Pad and Pep Step structure components. Contact your local Burke representative for more information.*

MILLER
&ASSOCIATES-SAUK PRAIRIE INC.
STREET SPORTS PARK & PLAY
Phone 608.643.8105 800.953.8700 www.millersaukprairie.com Fax 608.643.7932

C-3

Engineered Wood Fiber

Best Wood Mat

BEST WOOD MAT

C-3

The All Natural Safety Surface

- All Fresh Cut Hardwoods
- Clean - No chemical or additives
- Life expectancy 3 to 5 years

- Wheelchairs can roll on Best Wood Mat
- Meets U.S. Consumer Product Safety Commission Guidelines
- Has been tested properly for Shock absorbency

Good Playgrounds Start at Ground Level

TÜV SÜD America Inc.
Product Safety Services
47523 Clipper Drive
Plymouth, MI 48170
Phone: 734.455.4841

C-3

Surfacing Material Report – ASTM F1292-09

Client: DTAK, LLC
Manufacturer: DTAK, LLC
Manufacturing Location: New London, WI

Phone: 920.213.0966
Commercial Name of product: *Best Wood Mat*
Date of Manufacture: Unknown
No. of samples submitted: 12 Cu. Ft.

TUV Report No.: QI1300698-1
Report Date: 5/2/2013
Test Date: 5/1, and 5/2/2013
Initial Test ☑
Follow up Test ☐ Ref Job:
Sample Receipt Date: 4/29/2013
Ambient Air Temperature: 22.8°C
Humidity: 41.0%

Test Equipment:

Triax System 1:	☐	Environmental Chamber No.:	PLYP00101
Triax System 2:	☐	Calibration Due Date:	7/31/13
Accelerometer ID:	PLYP00089	Environmental Chamber No.:	PLYP00069
Accelerometer Calibration Due Date:	6/29/2013	Calibration Due Date:	7/31/13

Loose fill Material Sample Description:

Engineered Wood Fiber ☑
Loose Fill Wood ☐
Rubber ☐
Sand ☐
Gravel ☐
Other ☐

Un-compacted Depth: 16 Inches

Compacted Depth: 12 Inches

Unitary Sample Description:

Tiles ☐
Poured in Place ☐
Other ☐

Total Thickness: ____
Top Layer: ____
Base Layer: ____

Comments:

The above described sample was tested at : 12 Ft.

The results reported herein reflect the performance of the above described samples at the time of testing and at the temperature(s) reported. The results are specific to the described samples. Samples of surfacing materials that do not closely match the described samples will perform differently. The following data sheet provides an accurate representation of the test results. Compliance with this Standard does not constitute product certification.

Sample in compliance with ASTM F1292-09 at the temperature and rating specified? Yes ☑ No ☐

Signature: _____ Date: 5/2/2013

Reviewed by: _____ Date: 5/7/13

Client: DTAK, LLC

TUV Report No. QI1300698-1

Manufacturer: DTAK, LLC

Test Date: 5/1, and 5/2/2013

Drop	Specified Impact Height (Ft.)	Reference Temperature -6°C, (21.2°F)				Reference Temperature 23°C, (73.4°F)				Reference Temperature 49°C, (120.2°F)			
		G-Max	HIC	Velocity (ft/s)	Theoretical Drop Height (ft.)	G-Max	HIC	Velocity (ft/s)	Theoretical Drop Height (ft.)	G-Max	HIC	Velocity (ft/s)	Theoretical Drop Height (ft.)
1	12	52	230	27.7	11.928	58	257	27.7	11.928	63	245	27.7	11.928
2	12	75	359	27.9	12.101	75	337	27.7	11.928	76	331	27.8	12.014
3	12	83	416	27.9	12.101	79	358	27.8	12.014	84	385	28.0	12.188
Average		79	387.5			77	347.5			80	358		
Measured Surface Temperature		(-6°C)	Max. Change from reference + 5°C, (5°F)			23°C	Max. Change from reference ± 3°C, (5°F)			49°C	Max. Change from reference -3°C, (-5°F)		
Sample Condition:		DRY				DRY				DRY			

Drop	One foot over (Ft.)	Reference Temperature -6°C, (21.2°F)				Reference Temperature 23°C, (73.4°F)				Reference Temperature 49°C, (120.2°F)			
		G-Max	HIC	Velocity (ft/s)	Theoretical Drop Height (ft.)	G-Max	HIC	Velocity (ft/s)	Theoretical Drop Height (ft.)	G-Max	HIC	Velocity (ft/s)	Theoretical Drop Height (ft.)
1	N/A				0.000				0.000				0.000
2					0.000				0.000				0.000
3					0.000				0.000				0.000
Average		0	0			0	0			0	0		
Measured Surface Temperature		°C	Max. Change from reference + 5°C, (5°F)			°C	Max. Change from reference ± 3°C, (5°F)			°C	Max. Change from reference -3°C, (-5°F)		
Sample Condition:													

Drop	One foot under (Ft.)	Reference Temperature -6°C, (21.2°F)				Reference Temperature 23°C, (73.4°F)				Reference Temperature 49°C, (120.2°F)			
		G-Max	HIC	Velocity (ft/s)	Theoretical Drop Height (ft.)	G-Max	HIC	Velocity (ft/s)	Theoretical Drop Height (ft.)	G-Max	HIC	Velocity (ft/s)	Theoretical Drop Height (ft.)
1	N/A				0.000				0.000				0.000
2					0.000				0.000				0.000
3					0.000				0.000				0.000
Average		0	0			0	0			0	0		
Measured Surface Temperature		°C	Max. Change from reference + 5°C, (5°F)			°C	Max. Change from reference ± 3°C, (5°F)			°C	Max. Change from reference -3°C, (-5°F)		
Sample Condition:													

TÜV SÜD America

Detroit Testing Laboratory, Inc.

7111 E. 11 Mile Road, Warren, MI 48092-2709 • (810) 754-9000 • FAX (810) 754-9045 • www.dtl-inc.com

TEST REPORT

BEST LANDSCAPERS
P O BOX 70
TIGERTOWN WI 54486

DTL REPORT NO	060811
REPORT DATE	3/23/01
RECEIVE DATE	3/19/01
CUSTOMER REF	45166

ATTN: Mr. Ed Spanbeur

SAMPLE DESCRIPTION

- Best Landscapers submitted approximately sixty (60) cubic feet of material to be tested. Identified as Best Wood Mat. Testing performed on March 22, 2001.

WORK REQUESTED/TEST SPECIFICATIONS

- Wheelchair Work Measurement Method – Straight Propulsion with No Material on a Flat Surface with a Grade of 7.1%.
- Wheelchair Work Measurement Method – Straight Propulsion with Material and no Grade.
- Wheelchair Work Measurement Method – Turn 90° with No Material on a Flat Surface with a Grade of 7.1%.
- Wheelchair Work Measurement Method – Turning 90° with Material and No Grade.

ASTM F1951-99 Determination of Accessibility of Surface Systems Under and Around Playground Equipment.

CONCLUSION

- The average work force per meter measured lower when rolling over the Best Wood Mat material than when rolling on a flat surface with a 7.1% grade. The tested material passed the specification requirement.

Detroit Testing Laboratory, Inc. letters, reports and data are for the exclusive use of our customers to whom they are addressed and shall not be reproduced, except in full, without the written approval of the Laboratory. Our letters and reports apply only to those samples tested, and are not necessarily indicative of the qualities of apparently identical or similar products. Samples not destroyed in testing are retained for a maximum of thirty (30) days. The use of the name Detroit Testing Laboratory, Inc. or its Seal or Insignia, are not permitted to be used by the customer on their communications, brochures, advertising, reports or other forms of media, without prior written approval. Reported test parameters are generally specified as set points of testing equipment. All documentation and data utilized in the generation of this report are available upon request. DCF 1999 5/10/00.

TEST RESULTS

Procedure

- Test material (Best Wood Mat) was placed into fixture, then tested, rolling wheelchair with four (4) even pushes across the material within seven (7) seconds. This procedure was repeated five (5) times for each test (Straight and Turn).

Results

RUN #	NO MATERIAL (work per meter)	WITH MATERIAL (work per meter)
Straight Run 1	12.039	12.071
Straight Run 2	12.326	10.980
Straight Run 3	11.869	10.191
Straight Run 4	11.872	11:905
Straight Run 5	12.283	11.203
AVERAGE	12.064	11.362
Turn Run 1	11.386	10.302
Turn Run 2	10.536	11.155
Turn Run 3	11.431	9.784
Turn Run 4	11.376	9.961
Turn Run 5	11.419	9.281
AVERAGE	11.393	10.015

ASTM F1951-99 work per meter average was determined discarding the high and low work per foot values and averaging the remaining three (3) trials.

- Average work per meter straight, no material, Grade of 7.1% = 12.064
- Average work per meter straight, with material = 11.362
- Average work per meter turn, no material, Grade of 7.1% = 11.393
- Average work per meter turn, with material = 10.015

Requirements

- The average work per meter values for straight propulsion and for turning with material should be less than the average work per meter for straight and turning on a flat surface with a Grade of 7.1%.

TEST EQUIPMENT

Detroit Testing Laboratory, Inc.'s calibration system meets the requirements of ANSI/NCSL Z540-1-1994.

Required:

- DTL Wheelchair Accessibility Fixture
- Strain Gauge Reaction Torque Sensor, Lebow, Model #2110-110-500, ID #09715-Z, Calibrated to 8/14/01
- Signal Conditioner, Datizonics, Model #3370, ID #09361, Calibrated to 12/11/01
- Digital Protractor, Mitutoyo, Model Pro 360, ID #08696, Calibrated to 6/9/01
- Quickie Wheelchair, Model QZ
- Digital Humiguide, Taylor Model #5566, ID #09887, Calibrated to 6/13/01
- Tape Measure, ID #10043, Calibrated to 12/6/01
- Four (4) Foot Level
- 8" x 8" Ludell Tamper, Heat Treated Steel

Remarks:

- Wheelchair Rider Weight – 174.5 lbs.
- Total Weight (Rider and Wheelchair combined) = 207.6 lbs.
- Sample Material (Best Wood Mat) was installed in four (4) inch layers and tamped using an 8" x 8" hand tamper, attaining a 12" depth.

SAMPLE DISPOSITION

- The sample will be retained for thirty (30) days, then disposed of at the discretion of DTL unless otherwise instructed by Best Landscapers.

Reported by:

DETROIT TESTING LABORATORY, INC.

Michael K. Mullinax
Test Technician I
Certification Test Services

Keith G. Shelton
Certification Program Coordinator
Certification Test Services

MKM/KGS/sh

Enclosure: Terms and Conditions

City of Whitewater Council Agenda Item Information Sheet

Meeting Date: August 6, 2013 C-5

ITEM: Walworth St. / Elizabeth Intersection and Janesville/Walworth Intersection

PRESENTER: Charles Nass

PREVIOUS ACTION AND SUMMARY: **Council at a previous meeting asked staff to look at these two intersections and report back with our findings and recommendations for the portable stop signs that were used at these two intersections.**

BUDGET IMPACT, IF ANY: Cost for two overhead trombone arms and solar powered flashing stop signs. Cost of all material would be $8,221.00, copy of sales quote included. Installation would be by City staff. After talking to Doug Saubert, money could come from contingently fund if City Council so chooses.

STAFF RECOMMENDATION: **After meeting as a group with the City Manager, Police Chief, Neighborhood services Director, Park and Recreation Director and I. It was recommended and supported by all staff members to erect permanent Stop Signs at the intersection of Walworth Ave. and Elizabeth St. thus making that intersection a 4-way stop. (This would be the parts list material that is with this memo). It was further supported to install Pedestrian crossing signs at the Walworth Ave. and Janesville St intersection and remove the temporary stop signs that are used only during pre-school hours. This intersection has center Street Island or pedestrian refuge areas and also has a crossing guard assigned to this intersection to make sure students have a safe crossing as they proceed to school.**

ATTACHMENT(S) INCLUDED: Copy of Sales quote for needed material to make Walworth Ave. @ Elizabeth St. a four way stop intersection.

FOR MORE INFORMATION CONTACT: Charles Nass,
Superintendent Streets/Parks, City Forester

TAPCO®
TRAFFIC & PARKING CONTROL CO., INC.

BlinkerSigns®

- Solar Powered (110V Version available)
- No AC Power Required
- Easy Installation
- MUTCD Compliant
- Proprietary Day-Viz™ Circuitry
- 52.9% Reduction in Blow-Throughs

R1-1 SOLAR

TAPCO's brilliant innovation of enhancing traffic signs with LEDs (Light-Emitting Diodes) makes intersections safer, reduces accidents and saves lives!

Day-Viz™ (Daylight Visible) BlinkerSigns feature an array of incredibly bright LEDs that flash in unison, once per second, commanding the attention of drivers DAY AND NIGHT. Any MUTCD sign can be transformed into a BlinkerSign!

GSA Contract Holder
FSS Contract GS-07F-5924R
GS-07F-0234U

Patents #6,943,698; #6,693,556
Other Patents Pending

Features

- Installs easily onto any new or existing sign post
- Can be integrated into an ITS (Intelligent Transportation System)
- High intensity Day-Viz™ LEDs command attention day and night
- Can be programmed to operate continuously (24/7) or on solar time clocks, push-buttons and/or motion (vehicle) detectors
- Proprietary circuitry automatically adjusts light output for maximum visibility and battery efficiency
- Multiple signs can be synchronized
- Heightened driver awareness
- Increased visibility at high incident intersections

Applications

- New stop sign locations
- High incident intersections
- Rural roads

C-5

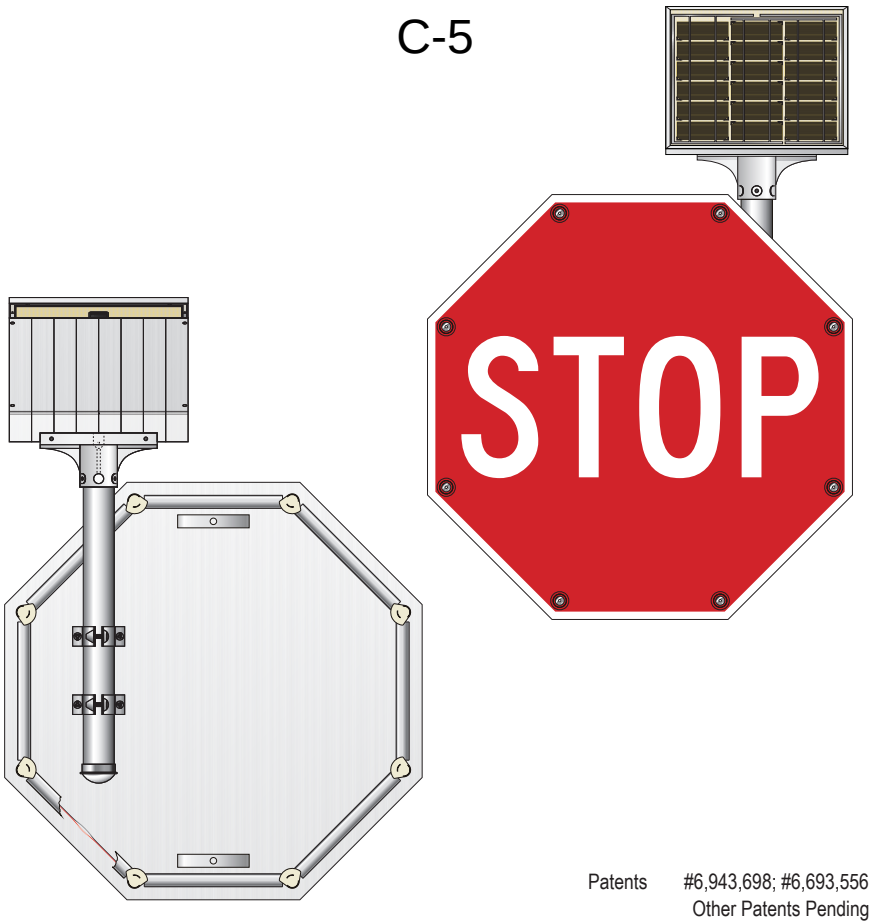

Patents #6,943,698; #6,693,556
Other Patents Pending

Standard Specifications*

Sign Specification- MUTCD #R1-1	
Sign Substrate	.080 Highway Grade Aluminum
Reflective Sheeting	3M™ DG³- with anti-graffiti overlay
MUTCD Compliance	MUTCD Section 2A.08 Compliant
Day-Viz™ Management System (patent pending)	
Battery	Nickel Metal Hydride (NiMH)—14,000mAh
Battery Lifespan	Up to 5 years
Autonomy- Functionality without Charge	Up to 30 days in 24/7 operation
Flash Pattern	MUTCD Compliant
LED Type	High Power Luxeon— 1 watt
LED Life Expectancy	Over 100,000 hours
Warranty	
Term	1 Full Year Warranty
Smart Activation Options	
24/7 continuous	
Time clock activation (Windows based software programmable)	
Wireless control activation	
Vehicle detection activation	

**All specifications subject to change without notice.*

For complete specifications and details call or visit www.tapconet.com

5100 W. Brown Deer • Brown Deer, WI 53223
Ph: 262.814.7000 • 800.236.0112
Fax: 262.814.7017 • 800.444.0331
www.tapconet.com • www.tapcostore.com

Distributed By:

04090001

R1-1 SOLAR

C-5

TAPCO®

5100 West Brown Deer Road, Brown Deer, Wisconsin 53223
Phone 1-800-236-0112 • www.tapconet.com • Fax 1-800-444-0331

SALES QUOTE

Customer Copy

Number	Q120468
Date	7/29/2013
Page	1

Sell To Cust. C394	Ship To Cust.
City Of Whitewater Chuck Nass 312 Whitewater Ave. P.O. Box 178 Whitewater, WI 53190	City Of Whitewater Dean Fischer 312 Whitewater Ave. P.O. Box 178 Whitewater, WI 53190

Reference #	Expires	Slsp	Terms	Freight	Ship Via
	8/28/2013	Aaron Guilbault	Net 30 DAYS	PREPAID	BEST RATE

Item	Description	Quantity	UM	Price	UM	Extension
159-00012	Arm Signal Aluminum 20 Ft Trombone	1	EA	895.00	EA	$895.00
159-00048	Arm Signal Aluminum 25 Ft Trombone	1	EA	1,195.00	EA	$1,195.00
159-00021	Shaft,Aluminum 20Ft WIS Type 2 ** .375 WALL **	2	EA	935.00	EA	$1,870.00
3177-00060	Bolt, 1" X 60" w/ 4" Hook,ATSM F1554 12"Thread Full Galv W/Nut&Lkwhr	4	EA	29.25	EA	$117.00
030-00004	Bolt, Conn 1X4 Galvanized with 1 Nut 1 Lockwasher 2 Flatwashers	4	EA	6.00	EA	$24.00
201-00017	Base,Transformer TB2-17 10-12"BC Door bolt must be SS hex head 1/4" x3/4"-20(TPI)	2	EA	235.00	EA	$470.00
2180-00208	Blinkersign, R1-1, 36", Stop, DG3, Red, Solar, 8 Red LEDs, Single Post Mount	2	EA	1,700.00	EA	$3,400.00
290-00034	Astro Sign Brac AB-0105-36-56	2	EA	125.00	EA	$250.00

Thank you- Aaron Guilbault
#920-728-1792
aaron@tapconet.com
#888-806-8885

****FREE FREIGHT****

Shipment within_____
Acceptance By _____
Date _____
By _____

Merchandise	Freight	Tax	Total
$8,221.00	$0.00	$0.00	$8,221.00

THANK YOU FOR CALLING TAPCO!!! THIS OFFER IS SUBJECT TO TERMS AND CONDITIONS SHOWN ON REVERSE SIDE

C-6

Michelle Smith
City of Whitewater
PO Box 178
Whitewater, WI 53190

Whitewater Area Chamber of Commerce
150 W Main St
Whitewater, WI 53190

July 15, 2013

Dear Michelle,

The Whitewater Area Chamber of Commerce is planning to hold the annual Maxwell Street Day celebration (Whitewater Wipeout) on Saturday, August 10th from 8:00 am – 5:00 pm. The committee is requesting permission to close 1st street between main and Center, for our stage and Band. The event has been created to promote the buy local program and designed to add fun and family activates to the summer break.

The following forms have been turned into the City. Please let me know if additional information is needed.

- Banner Request with payment of $75.00
- Application for Entertainment with payment of $40.00
- Fair Market application
- Armory rental has been approved.

Since parking is "at a premium", we would also ask that the police department not ticket cars during Whitewater Wipeout in an effort to encourage people to park and shop downtown.

The Whitewater Area Chamber of Commerce would like to thank everyone in advance for their help and support as we work together providing another opportunity to promote Whitewater.

Sincerely,

Marie Koch
Executive Director
Whitewater Area Chamber of Commerce

Hi Michelle

Thank you for taking the time to look over our information. We would like to have the street shut down at 7 am to 6 pm. If you provide the cones and street closed stands we can put them out and set them on a corner of the sidewalk when we clean up.

We may be using the UW Showmobile. The only time they can deliver it is Friday afternoon and pick it up first thing Monday. If we are able to get it, we will also need to request that most of the parking on one side of the street be blocked off for that time frame.

Please let me know if I need to contact anyone else or if you need me to come over. If you can't reach me at the office, my cell phone is 262-949-3484

Thank you for all your help.
Marie Koch
Executive Director
150 W Main Street
Whitewater WI 53190
262-473-4005
info@whitewaterchamber.com

From: Michele Smith [mailto:MSmith@whitewater-wi.gov]
Sent: Wednesday, July 24, 2013 3:32 PM
To: 'Whitewater Chamber of Commerce'
Subject: RE: street Closing

Marie,

Thank you for the forms. I am sorry I was not available to speak with you came in.

Marie, could you confirm what hours you need to have the Street closed? Please included setup and take down times.

Also, I do not have authority to have parking tickets waived that day, but will pass your request on to the Whitewater PD.

Michele

From: Whitewater Chamber of Commerce [mailto:info@whitewaterchamber.com]
Sent: Wednesday, July 24, 2013 3:06 PM
To: Michele Smith
Subject: street Closing

Hi Michelle

I am on my way over to bring you all the paperwork.

Marie Koch
Executive Director
150 W Main Street
Whitewater WI 53190
262-473-4005
info@whitewaterchamber.com

C - 7

City of Whitewater Council Agenda Item Information Sheet

MEETING DATE: **08/06/2013** ITEM: **Open Meetings & Open Records Review**

PRESENTER: **City Manager & City Attorney**

PREVIOUS ACTION, IF ANY: **None.**

SUMMARY OF ITEM BEING PRESENTED:
Originally planned for the Common Council/Management Staff Retreat, this review is a "refresher" for seasoned members of the Common Council and an informational session for new members. City Attorney, Wally McDonnell will provide an overview of both laws.

A great deal of information on both laws is provided for viewing online by the League of Wisconsin Municipalities at www.lwm-info.org and in the League's publication *Handbook for Wisconsin Municipal Officials* which each member of the Common Council should have received earlier this year or at the beginning of their current term in office.

BUDGET IMPACT, IF ANY: **None.**

BOARD, COMMISSION, OR COMMITTEE RECOMMENDATION, IF ANY: **None**

STAFF RECOMMENDATION: **None.**

RECOMMENDED MOTION: **None**

ATTACHMENT(S) INCLUDED (If none, please state that): **None.**

FOR MORE INFORMATION CONTACT:
Cameron Clapper, City Manager, 262.473.0100, cclapper@whitewater-wi.gov.